This document is the absolute property of R&M Materials Handling, Inc. This document must not be copied without the written permission of R&M Materials Handling, Inc.
The contents thereof must not be disclosed to a third party nor be used for any unauthorized purpose. Contravention will be prosecuted.

Included in

RTN20B END TRUCK TOP JOINT PLATE TYPE L

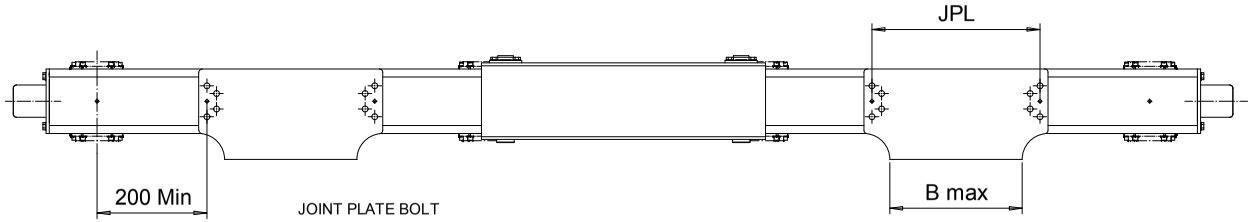

JOINT PLATE BOLT
TIGHTENING TORQUE
M16 Bolt - Torque to 300Nm
M20 Bolt - Torque to 580 Nm

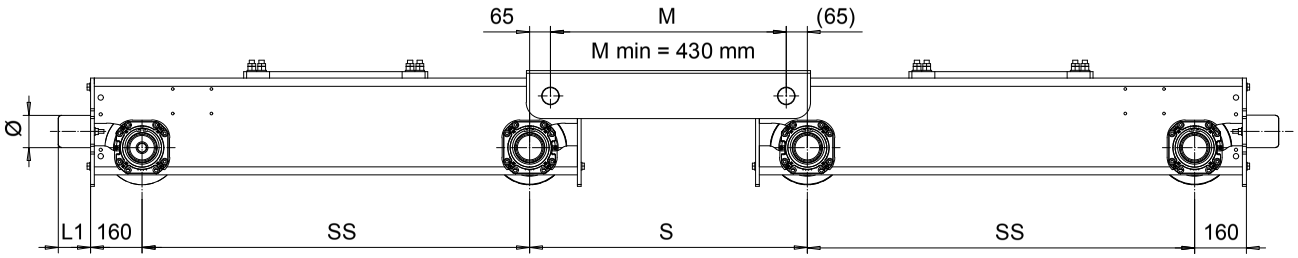

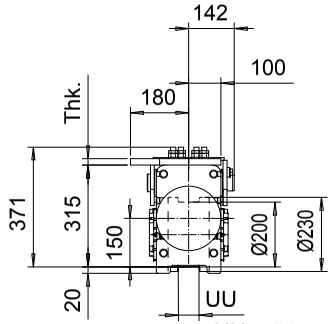

UU = 54 mm - 94 mm

Buffer type	L1 (mm)	Ø (mm)
B	68	80
C	85	100
D	105	125
K	80	80
G	100	100
E	150	100
F	190	125
H	160	160
I	200	200
M	125	125
P	240	160
S	300	200
B, C, D rubber		
K, G, E, F, H, I, M, P, S polyurethane		

(Product Code example)

RTN20B1274-L41540C0860-N

- N=standard, E=Special
- -primer paint, color code
- Inner wheel distance =S
- Buffer type
- Joint plate distance =PP; (pin to pin, with double girder)
- Joint plate code
- - =1WD, D =2WD
- Wheel groove =UU
- Wheel base =SS
- - B =bogie
- Type of end carriage

The wheel loads listed are only a guideline. The max. wheel load listed is based on the structural integrity of the frame and load placement, and it does not take into account permissible wheel loading or bearing life. SG load placement is at the center, and DG load placement is for a trolley gage of 1400 mm [55 1/8"].
The permissible dynamic wheel load listed is based on assumptions that the bridge speed is 40 m/min [130 fpm], end truck duty is Fem 2m, and the runway rail as listed.
The actual wheel load should not exceed the permissible wheel load. If the permissible dynamic wheel load is greater than the maximum dyn wheel load, then the actual wheel load cannot exceed maximum dyn wheel load.
Dyn wheel load = 1.15 x static wheel load

Joint plate	Thickness (mm)	JPL (mm)	B MAX (mm)
L3	25	410	300
L4	20	520	410
L5	20	630	520
L6	20	740	630

Wheelbase Code	SS (mm)	Max dyn whl load (kN)	Permissible dyn whl load, (kN) ASCE 40	ASCE 60	ASCE 85	Approx. Weight (kg)
12	1200	132	65.9	88	98	376
14	1400	132	65.9	88	98	405
16	1600	132	65.9	88	98	434
18	1800	132	65.9	88	98	463
20	2000	132	65.9	88	98	492

Pos	Description	Specification	Id	Drawing
ETTVPH Design		ETTVPH Chd	Appd	Ref Drawing
2008-05-23 Date		END TRUCK OUTLINE DRAWING		1:10
Dept		RTN20B-L		Folder ECN20
R&M MATERIALS HANDLING INC.	R&M MATERIALS HANDLING, INC. HOIST & CRANE PRODUCTS SPRINGFIELD, OHIO	RTN20B END TRUCK TOP JOINT		Issue 03/2011