This document is the absolute property of R&M Materials Handling, Inc. This document must not be copied without the written permission of R&M Materials Handling, Inc.
The contents thereof must not be disclosed to a third party nor be used for any unauthorized purpose. Contravention will be prosecuted.

Included in				
Rev	Explanation	Date	Revised by	Checked by

RTN25 END TRUCK TOP JOINT PLATE TYPE H

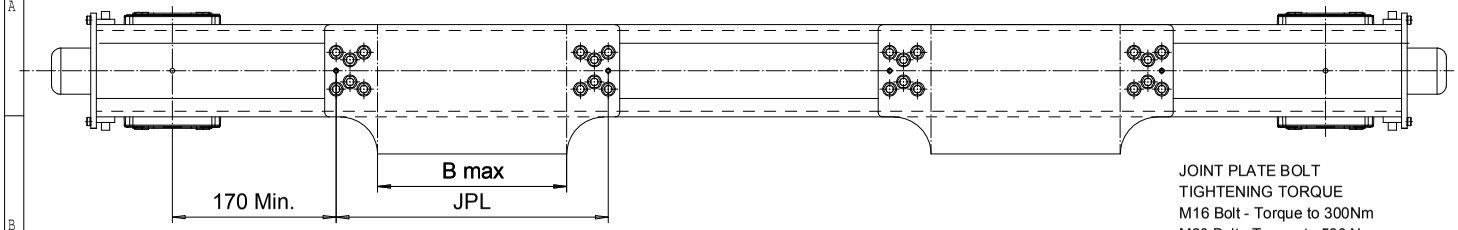

JOINT PLATE BOLT
TIGHTENING TORQUE
M16 Bolt - Torque to 300Nm
M20 Bolt - Torque to 580 Nm

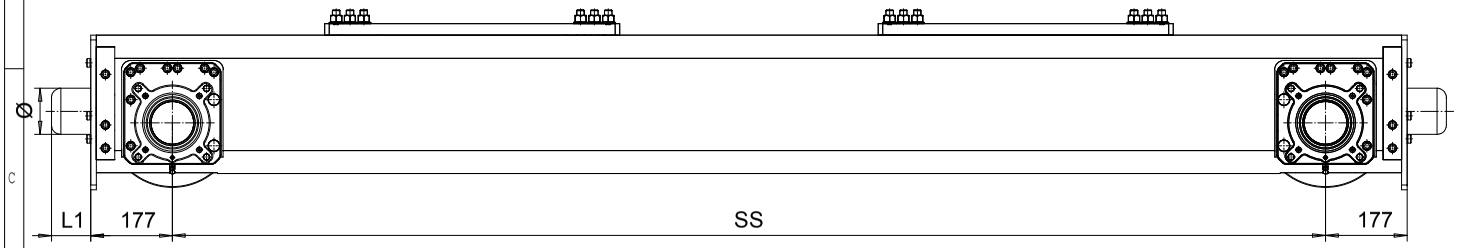

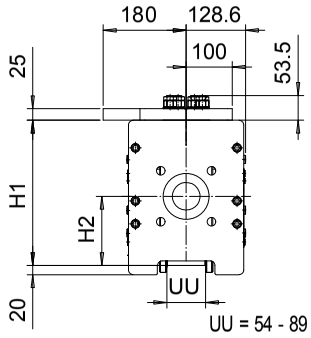

Wheelbase	SS	Max dyn whl load, (kN)		Perm dyn whl load, (kN)		Approx Wt./Trk, kg		H1		H2	
code	(mm)	SG	DG	ASCE 60	ASCE 85	SG	DG	SG	DG	SG	DG
20	2000	185	-	114.6	126.5	375	-	315	-	150	-
25	2500	171	185	114.6	126.5	419	459	315	315	150	150
32	3150	170	185	114.6	126.5	545	585	415	315	150	150
40	4000	158	185	114.6	126.5	637	677	415	415	150	150
45	4500	128	139	114.6	126.5	691	731	415	415	150	150
50	5000	138	182	114.6	126.5	904	944	420	420	155	155
55	5500	125	135	114.6	126.5	973	1013	420	420	155	155

Buffer type	L1	Ø
	(mm)	(mm)
B	68	80
C	85	100
D	105	125
K	80	80
G	100	100
E	150	100
F	190	125
H	160	160
I	200	200
M	125	125
P	240	160
S	300	200
B, C, D rubber		
K, G, E, F, H, I, M, P, S polyurethane		

Joint plate	JPL	B max
	(mm)	(mm)
H4	590	410
H5	700	520
H7	920	740
H9	1170	990

Product Code example

RTN25-2574-H40610C0000-N

- N=standard, E=Special
- -primer paint, color code (not in use with RTN25)
- Buffer type
- Joint plate distance (DG)
- Joint plate code
- - =1WD, D =2WD (per truck)
- Wheel groove =UU
- Wheel base =SS
- - =std, C=asymmetrical joint
- Type of end carriage

The wheel loads listed are only a guideline. The max. wheel load listed is based on the structural integrity of the frame and load placement, and it does not take into account permissible wheel loading or bearing life. SG load placement is at the center, and DG load placement is for a trolley gage of 1400 mm [55 1/8"].
The permissible dynamic wheel load listed is based on assumptions that the bridge speed is 40 m/min [130 fpm], end truck duty is Fem 2m, and the runway rail as listed.
If permissible dynamic wheel load is greater than the maximum dyn wheel load, use maximum dyn wheel load to select the end truck.
Dyn wheel load = 1.15 x static wheel load

Pos	Description	Specification	Id	Drawing
ETTPIA Design		ETTPIA Chd	Appd	Ref Drawing
2008-08-11 Date		END TRUCK		1 : 7
SLEQDOCV Dept		OUTLINE DRAWING		Folder ECN25
R&M MATERIALS HANDLING INC.	R&M MATERIALS HANDLING, INC. HOIST & CRANE PRODUCTS SPRINGFIELD, OHIO	RTN25-H		
		RTN25 END TRUCK TOP JOINT		Issue 03/2011