This document is the absolute property of R&M Materials Handling, Inc. This document must not be copied without the written permission of R&M Materials Handling, Inc.
The contents thereof must not be disclosed to a third party nor be used for any unauthorized purpose. Contravention will be prosecuted.

Included in

RTN20B END TRUCK TOP JOINT PLATE TYPE L

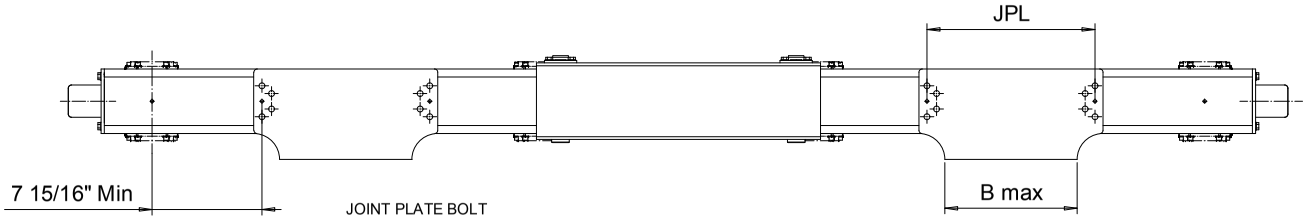

JOINT PLATE BOLT
TIGHTENING TORQUE
M16 Bolt - Torque to 221 ft-lb
M20 Bolt - Torque to 427 ft-lb

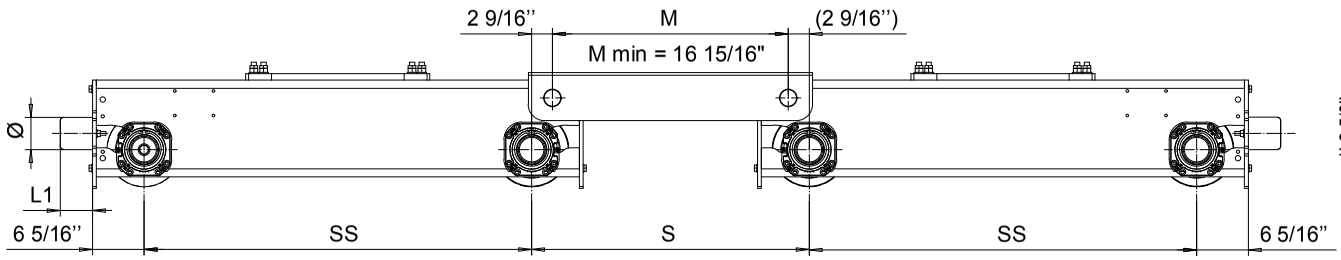

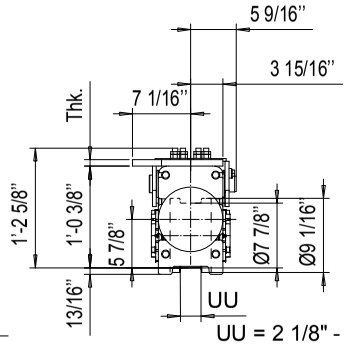

UU = 2 1/8" - 3 3/4"

Buffer type	L1	Ø
B	2 11/16"	3 3/16"
C	3 5/16"	3 15/16"
D	4 1/8"	4 15/16"
K	3 3/16"	3 3/16"
G	3 15/16"	3 15/16"
E	5 15/16"	3 15/16"
F	7 1/2"	4 15/16"
H	6 5/16"	6 5/16"
I	7 7/8"	7 7/8"
M	4 15/16"	4 15/16"
P	9 7/16"	6 5/16"
S	11 13/16"	7 7/8"
B, C, D rubber		
K, G, E, F, H, I, M, P, S polyurethane		

(Product Code example)

RTN20B1274-L41540C0860-N

- N=standard, E=Special
- -primer paint, color code
- Inner wheel distance =S
- Buffer type
- Joint plate distance =PP; (pin to pin, with double girder)
- Joint plate code
- - =1WD, D =2WD
- Wheel groove =UU
- Wheel base =SS
- - B =bogie
- Type of end carriage

The wheel loads listed are only a guideline. The max. wheel load listed is based on the structural integrity of the frame and load placement, and it does not take into account permissible wheel loading or bearing life. SG load placement is at the center, and DG load placement is for a trolley gage of 1400 mm [55 1/8"].
The permissible dynamic wheel load listed is based on assumptions that the bridge speed is 40 m/min [130 fpm], end truck duty is Fem 2m, and the runway rail as listed.
The actual wheel load should not exceed the permissible wheel load. If the permissible dynamic wheel load is greater than the maximum dyn wheel load, then the actual wheel load cannot exceed maximum dyn wheel load.
Dyn wheel load = 1.15 x static wheel load

Joint plate	Thickness	JPL	B MAX
L3	1"	16.14"	11 13/16"
L4	13/16"	20.47"	16 3/16"
L5	13/16"	24.8"	20 1/2"
L6	13/16"	29.13"	24 13/16"

Wheelbase Type	SS	Max dyn whl load (kip)	Permissible dyn whl load, (kip) ASCE 40	ASCE 60	ASCE 85	Approx. Weight (lb)
12	3'-11 1/4"	29.7	14.8	19.8	22	828
14	4'-7 1/8"	29.7	14.8	19.8	22	892
16	5'-3"	29.7	14.8	19.8	22	956
18	5'-10 7/8"	29.7	14.8	19.8	22	1020
20	6-6 3/4"	29.7	14.8	19.8	22	1084

Pos	Description	Specification	Id	Drawing
ETTVPH Design	ETTVPH Chd	Appd	Ref Drawing	
2008-05-23 Date	END TRUCK OUTLINE DRAWING RTN20B-L			1:10
Dept				Folder ECN20
R&M MATERIALS HANDLING INC.	R&M MATERIALS HANDLING INC. HOIST & CRANE PRODUCTS SPRINGFIELD, OHIO	RTN20B END TRUCK TOP JOINT		Issue 03/2011