This document is the absolute property of R&M Materials Handling, Inc. This document must not be copied without the written permission of R&M Materials Handling, Inc.
The contents thereof must not be disclosed to a third party nor be used for any unauthorized purpose. Contravention will be prosecuted.

Included in				
Rev	Explanation	Date	Revised by	Checked by

RTN25 END TRUCK TOP JOINT PLATE TYPE H

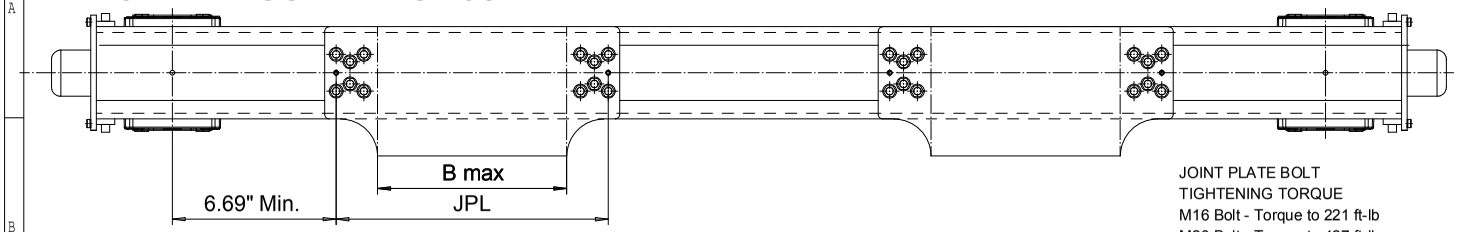

JOINT PLATE BOLT
TIGHTENING TORQUE
M16 Bolt - Torque to 221 ft-lb
M20 Bolt - Torque to 427 ft-lb

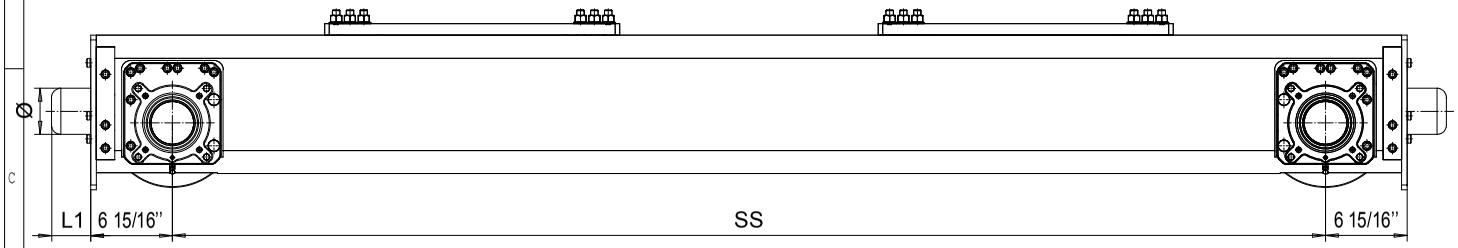

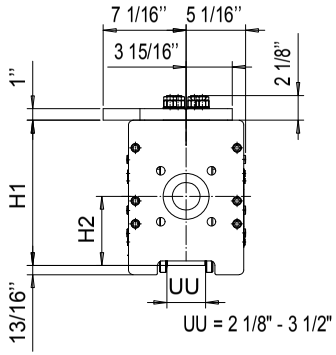

Wheelbase	SS	Max dyn whl load, (kip)		Perm dyn whl load, (kip)		Approx. Wt./Trk, lb		H1		H2	
code		SG	DG	ASCE 60	ASCE85	SG	DG	SG	DG	SG	DG
20	6'-6 3/4"	41.63	-	25.8	28.4	826	-	12 3/8"	-	5 15/16"	-
25	8'-2 7/16"	38.48	41.63	25.8	28.4	923	1011	12 3/8"	12 3/8"	5 15/16"	5 15/16"
32	10'-4"	38.25	41.63	25.8	28.4	1202	1290	16 3/8"	12 3/8"	5 15/16"	5 15/16"
40	13'-1 1/2"	35.55	41.63	25.8	28.4	1405	1493	16 3/8"	16 3/8"	5 15/16"	5 15/16"
45	14'-9 3/16"	28.8	31.28	25.8	28.4	1524	1612	16 3/8"	16 3/8"	5 15/16"	5 15/16"
50	16'-4 7/8"	31.05	40.95	25.8	28.4	1993	2080	16 9/16"	16 9/16"	6 1/8"	6 1/8"
55	18'-1/2"	28.13	30.38	25.8	28.4	2145	2232	16 9/16"	16 9/16"	6 1/8"	6 1/8"

Buffer type	L1	Ø
B	2 11/16"	3 3/16"
C	3 5/16"	3 15/16"
D	4 1/8"	4 15/16"
K	3 3/16"	3 3/16"
G	3 15/16"	3 15/16"
E	5 15/16"	3 15/16"
F	7 1/2"	4 15/16"
H	6 5/16"	6 5/16"
I	7 7/8"	7 7/8"
M	4 15/16"	4 15/16"
P	9 7/16"	6 5/16"
S	11 13/16"	7 7/8"
B, C, D rubber		
K, G, E, F, H, I, M, P, S polyurethane		

Joint plate	JPL	B max
H4	23.23"	16 1/8"
H5	27.56"	20 7/16"
H7	36.22"	29 1/8"
H9	46.06"	38 15/16"

Product Code example

RTN25-2574-H40610C0000-N

- N=standard, E=Special
- -primer paint, color code (not in use with RTN25)
- Buffer type
- Joint plate distance (DG)
- Joint plate code
- - =1WD, D =2WD (per truck)
- Wheel groove =UU
- Wheel base =SS
- - =std, C=asymmetrical joint
- Type of end carriage

The wheel loads listed are only a guideline. The max. wheel load listed is based on the structural integrity of the frame and load placement, and it does not take into account permissible wheel loading or bearing life. SG load placement is at the center, and DG load placement is for a trolley gage of 1400 mm [55 1/8"].
The permissible dynamic wheel load listed is based on assumptions that the bridge speed is 40 m/min [130 fpm], end truck duty is Fem 2m, and the runway rail as listed.
If permissible dynamic wheel load is greater than the maximum dyn wheel load, use maximum dyn wheel load to select the end truck.
Dyn wheel load = 1.15 x static wheel load

Pos	Description	Specification	Id	Drawing
ETTPIA Design		ETTPIA Chd	Appd	Ref Drawing
2008-08-11 Date	END TRUCK			1 : 7
SLEQDOCV Dept	OUTLINE DRAWING			Folder ECN25
R&M MATERIALS HANDLING INC.	R&M MATERIALS HANDLING, INC. HOIST & CRANE PRODUCTS SPRINGFIELD, OHIO	RTN25-H		
		RTN25 END TRUCK TOP JOINT		Issue 03/2011