WB-R400 WHEEL BLOCK

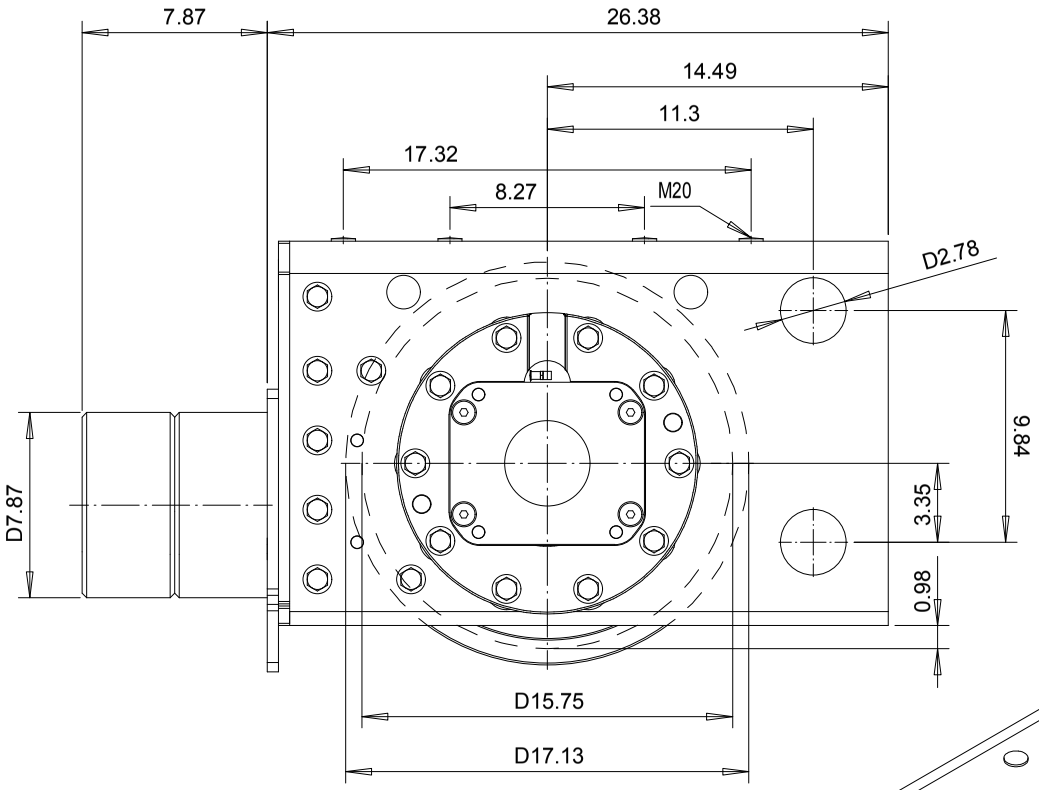

Wheel Block with drive wheel shown

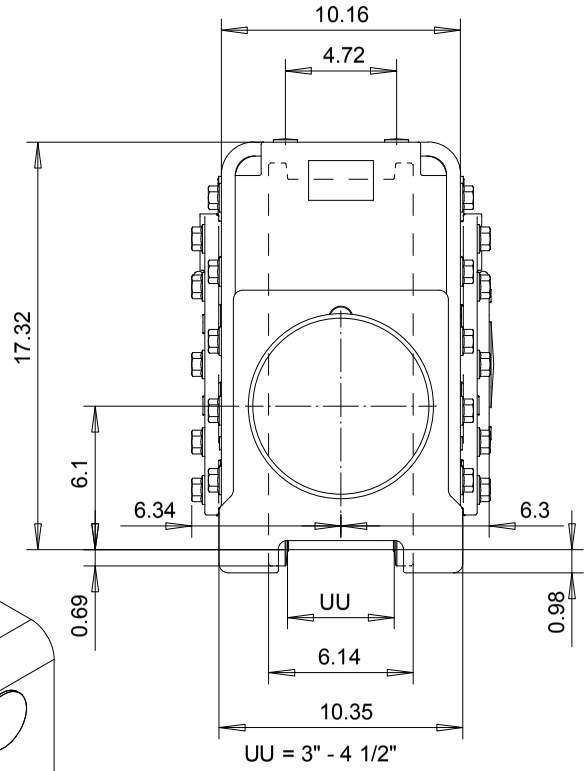

UU = 3" - 4 1/2"

See technical guide for maximum permissible wheel loads.

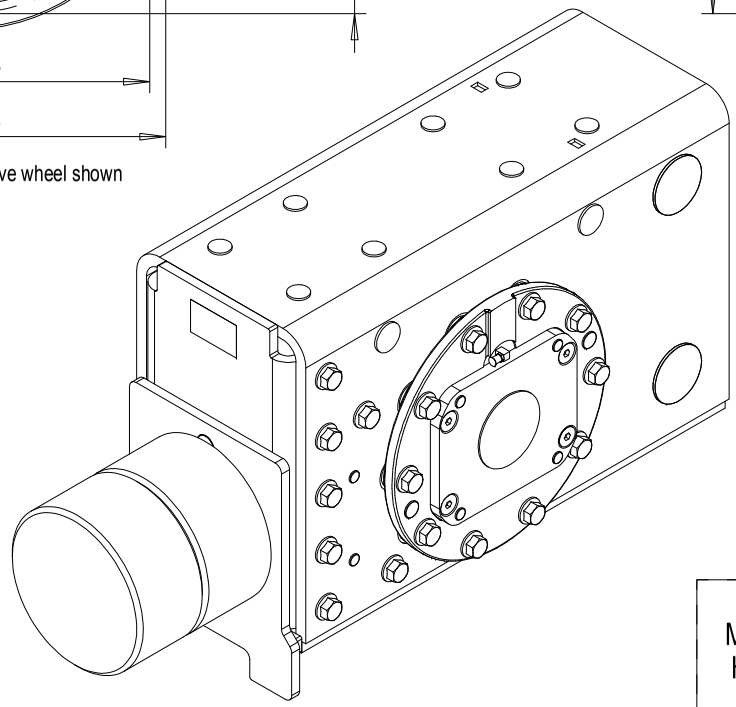

Weight: 510 lbs

Drive: GES5
Acceptable rail: 60 mm, 70 mm, 80 mm, 100 mm, 2 1/2", 3", 3 1/2"
ASCE 60, ASCE 80, ASCE 85, BETH 135
Orientation: Right-hand or Left-hand
Configuration: Idler or Driven

R&M MATERIALS HANDLING INC	WB-R400 WHEEL BLOCK	
	D006921-A	5/2011