Dimensions are for reference in estimating only. Use of various modifications may affect overall dimensional outline. Where dimensions are critical, request certified drawings for construction. All dimensions are in millimeters unless otherwise noted.

**For 1-fall, see outline drawing 2213417106 for dimensions

SINGLE-PHASE CHAIN HOIST

2213417107

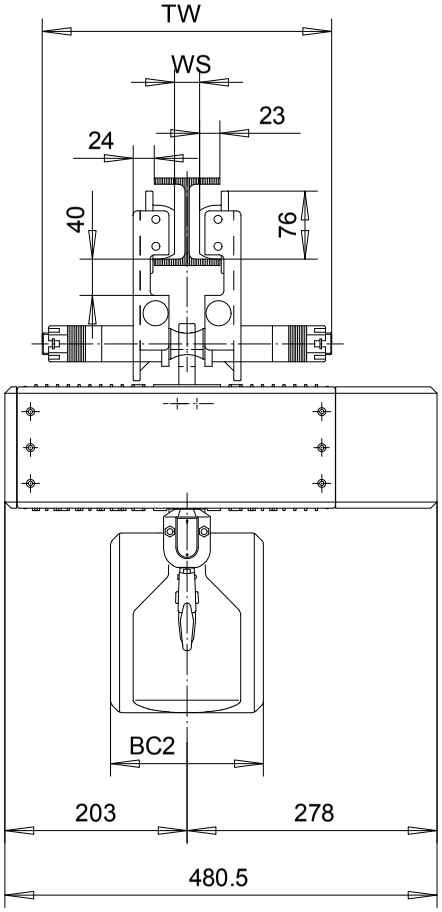

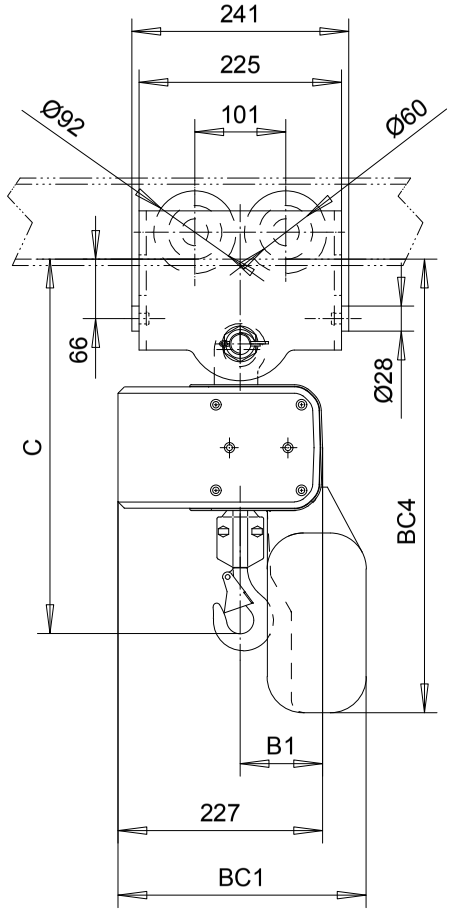

	C	B1	BC1				BC2				BC4			
LIFT			< 4m	< 8m	< 15m	< 25m	< 4m	< 8m	< 15m	< 25m	< 4m	< 8m	< 15m	< 25m
2 FALLS	525	112	276	316	311	311	160	150	320	320	508	568	633	633

Minimum radius curve: 1 meter

SINGLE-PHASE CHAIN HOIST

LOADMATE CHAIN HOIST MODEL NUMBER							FLG CODE
FR	CAP kg	LIFT m	SUSP	1 SPEED m/MIN	2 SPEED m/MIN(4:1)	FALL	
LM05	1000	3	PT	2.4S	---	2	1,2

TROLLEY DIMENSIONS					
FLG CODE	FLANGE RANGES	MAX. TD	MAX TW	MIN. WS	MAX FLG THK
1	65 - 200	**	322	19	35
2	200 - 310	**	430	154	35
	**				

Chd	Appd	p_2213417107 File
2003-01-20 Date	2213417107	
R&M MATERIALS HANDLING INC.	R&M Materials Handling Inc.	
	4501 Gateway Blvd, Springfield	
	LM05 PT HOIST	Issue 05/2010