Dimensions are for reference in estimating only. Use of various modifications may affect overall dimensional outline. Where dimensions are critical, request certified drawings for construction. All dimensions are in millimeters unless otherwise noted.

SINGLE-PHASE CHAIN HOIST

2213417100

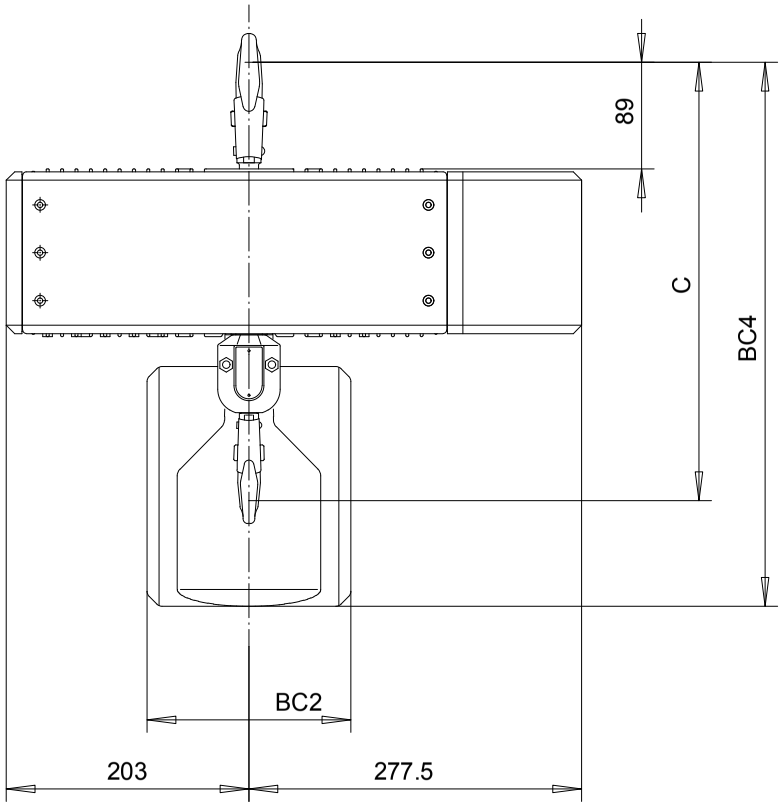

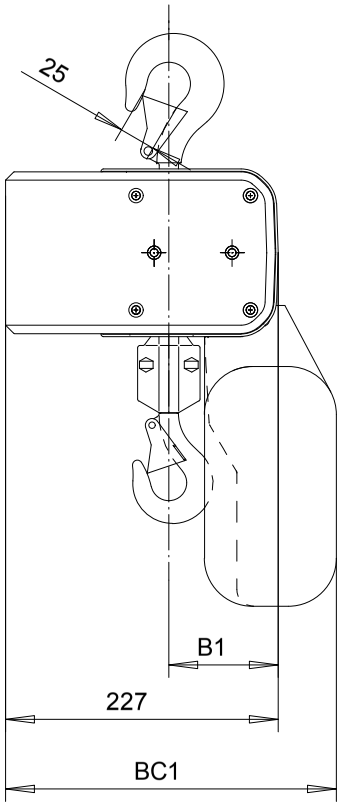

	C	B1	BC1				BC2				BC4			
LIFT			< 8m	< 16m	< 30m	< 46m	< 8m	< 16m	< 30m	< 46m	< 8m	< 16m	< 30m	< 46m
1 FALL	419	92	302	340	340	340	168	168	153	321	454	518	584	584
LIFT			< 4m	< 8m	< 15m	< 23m	< 4m	< 8m	< 15m	< 23m	< 4m	< 8m	< 15m	< 23m
2 FALLS	470	114	302	340	340	340	168	168	153	321	454	518	584	584

SINGLE-PHASE CHAIN HOIST

LOADMATE CHAIN HOIST MODEL NUMBER							FLG CODE
FR	CAP kg	LIFT m	SUSP	1 SPEED m/MIN	2 SPEED m/MIN(4:1)	FALL	
LM05	250	3	TH	4.9S	---	1	---
LM05	500	3	TH	4.9S	---	1	---
LM05	1000	3	TH	2.4S	---	2	---

TROLLEY DIMENSIONS					
FLG CODE	FLANGE RANGES	MAX. TD	MAX. TW	MIN. WS	MAX. FLG THK
---	---	---	---	---	---

Chd	Appd	p_2213417100 File
05/18/04 Date	2213417100	
R&M MATERIALS HANDLING INC.	R&M Materials Handling Inc.	
	4501 Gateway Blvd, Springfield	
	LM05 TH HOIST	Issue 05/2010