Dimensions are for reference in estimating only. Use of various modifications may affect overall dimensional outline. Where dimensions are critical, request certified drawings for construction. All dimensions are in millimeters unless otherwise noted.

SINGLE-PHASE CHAIN HOIST

2213417099

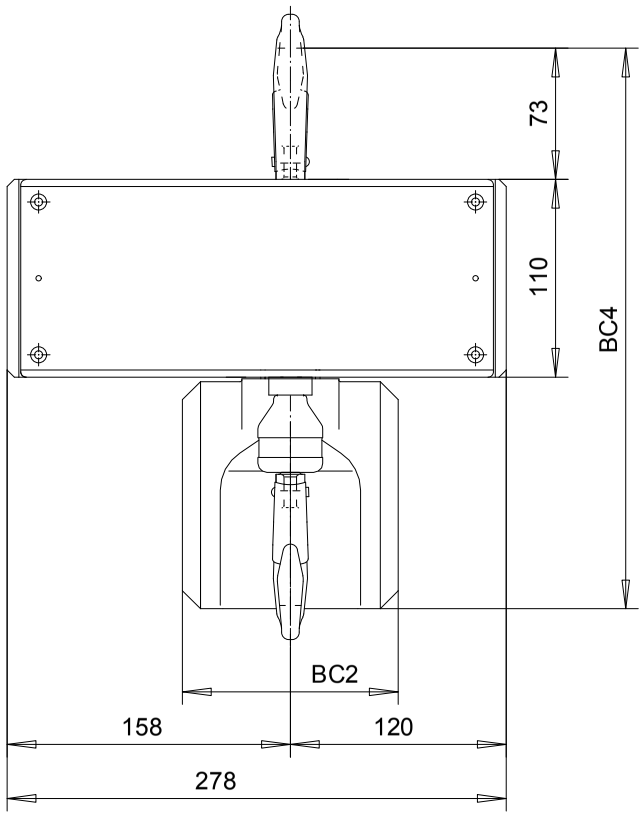

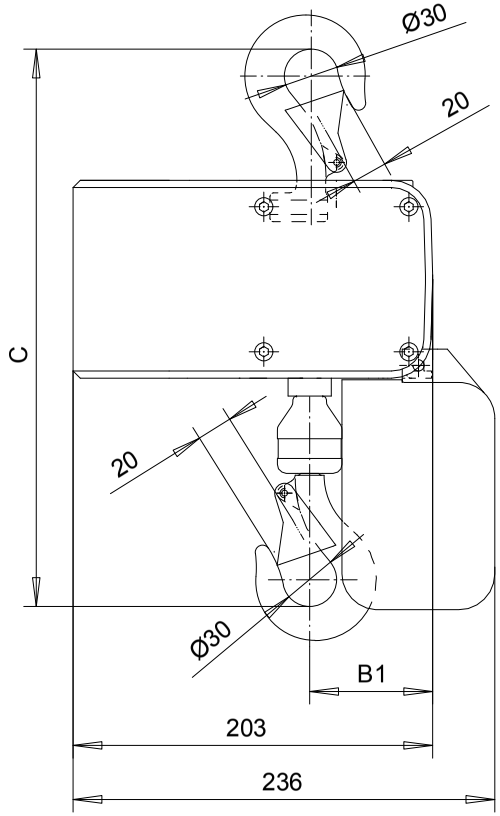

	C	B1	BC2			BC4		
LIFT			< 8m	< 16m	< 30m	< 8m	< 16m	< 30m
1 FALL	310	68	120	130	130	312	374	459

SINGLE-PHASE CHAIN HOIST

LOADMATE CHAIN HOIST MODEL NUMBER							FLG CODE
FR	CAP Kg	LIFT m	SUSP	1 SPEED m/MIN	2 SPEED m/MIN(4:1)	FALL	
LM1	125	3	TH	4.9S	---	1	---

TROLLEY DIMENSIONS					
FLG CODE	FLANGE RANGES	MAX. TD	MAX. TW	MIN. WS	MAX. FLG THK
---	---	---	---	---	---

Chd	Appd	p_2213417099 File
2001-01-19 Date	2213417099	
R&M MATERIALS HANDLING INC.	R&M Materials Handling Inc.	
	4501 Gateway Blvd, Springfield	
	LM1 TH HOIST	Issue 05/2010