Dimensions are for reference in estimating only. Use of various modifications may affect overall dimensional outline. Where dimensions are critical, request certified drawings for construction. All dimensions are in inches unless otherwise noted.

2213417104

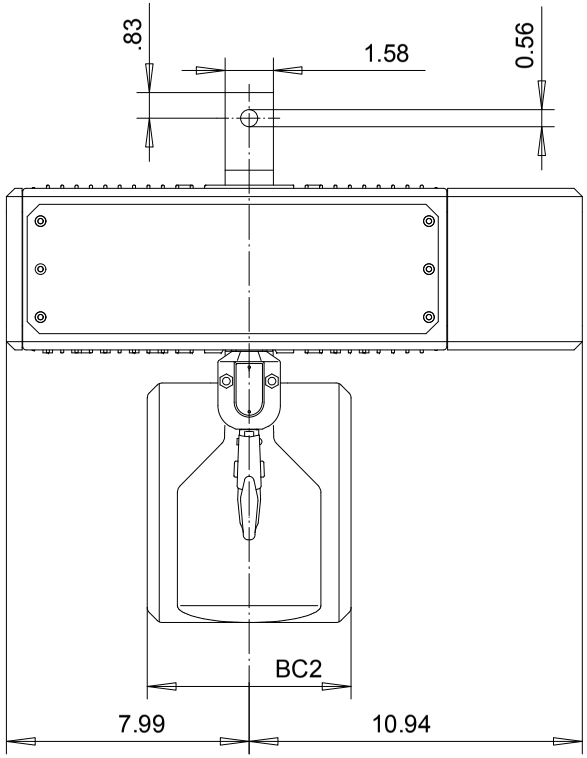

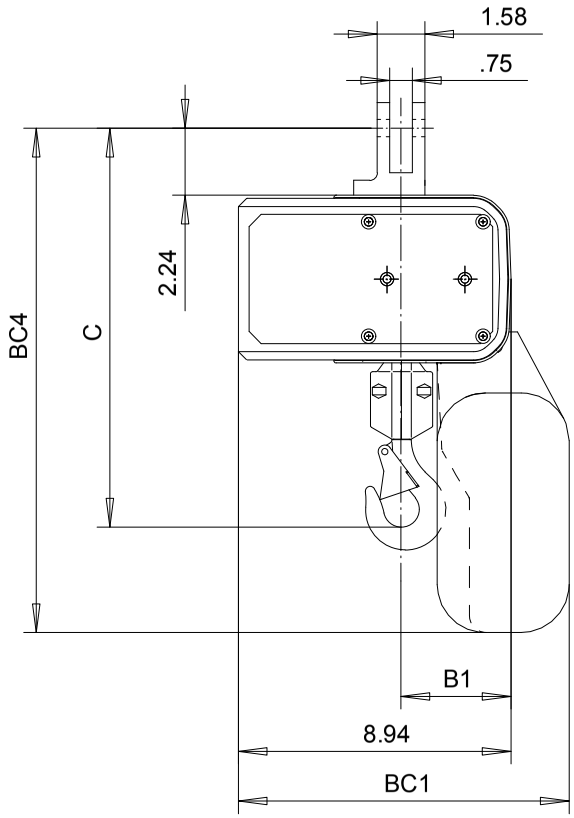

	C	B1	BC1				BC2				BC4			
LIFT	---	---	< 25ft	< 50ft	< 100ft	< 150ft	< 25ft	< 50ft	< 100ft	< 150ft	< 25ft	< 50ft	< 100ft	< 150ft
1 FALL	13 1/4"	3.58	10.87	12.44	12.24	12.24	6.30	5.91	5.91	12.60	16.73	19.09	21.65	21.65
LIFT	---	---	< 13ft	< 25ft	< 50ft	< 75ft	< 13ft	< 25ft	< 50ft	< 75ft	< 13ft	< 25ft	< 50ft	< 50ft
2 FALLS	15 1/4"	4.41	10.87	12.44	12.24	12.24	6.30	5.91	5.91	12.60	16.73	19.09	21.65	21.65

LOADMATE CHAIN HOIST MODEL NUMBER							
FR	CAP TON	LFT FT	SUSP	1 SPEED FPM	2 SPEED FPM(4:1)	FALL	FLG CODE
LM05	1/4	10	LMX	16S	---	1	---
LM05	1/2	10	LMX	16S	---	1	---
LM05	1	10	LMX	8S	---	2	---

TROLLEY DIMENSIONS					
FLG CODE	FLANGE RANGES	MAX. TD	MAX TW	MIN. WS	MAX FLG THK
---	---	---	---	---	---

Chd	Appd	p_2213417104 File
2001-01-11 Date	2213417104	
R&M MATERIALS HANDLING INC.	R&M Materials Handling Inc.	
	4501 Gateway Blvd, Springfield	
	LM05 LMX HOIST	Issue 05/2010