Dimensions are for reference in estimating only. Use of various modifications may affect overall dimensional outline. Where dimensions are critical, request certified drawings for construction. All dimensions are in inches unless otherwise noted.

**For 1-fall, see outline drawing 2213417106 for dimensions

SINGLE-PHASE CHAIN HOIST

2213417107

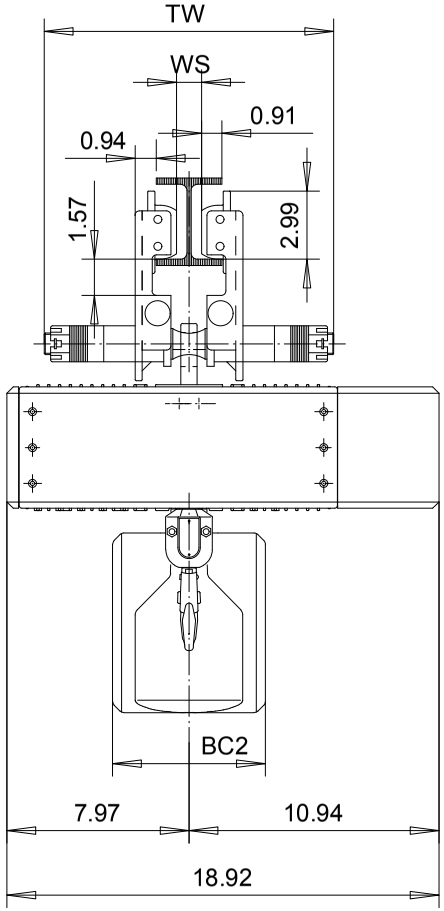

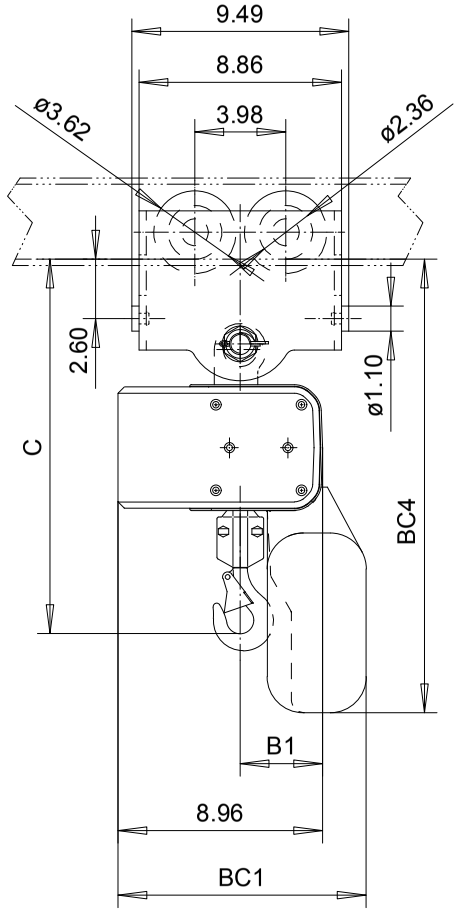

	C	B1	BC1				BC2				BC4			
LIFT			< 13ft	< 25ft	< 50ft	< 75ft	< 13ft	< 25ft	< 50ft	< 75ft	< 13ft	< 25ft	< 50ft	< 75ft
2 FALLS	20 3/4"	4.41	10.87	12.44	12.24	12.24	6.30	5.91	12.60	12.60	20.00	22.36	24.92	24.92

Minimum radius curve: 39.4 in.

SINGLE-PHASE CHAIN HOIST

LOADMATE CHAIN HOIST MODEL NUMBER							
FR	CAP TON	LIFT FT	SUSP	1 SPEED FPM	2 SPEED FPM(4:1)	FALL	FLG CODE
LM05	1	10	PT	8S	---	2	1,2

TROLLEY DIMENSIONS					
FLG CODE	FLANGE RANGES	MAX. TD	MAX TW	MIN. WS	MAX FLG THK
1	2.56 - 7.87	**	12.68	0.75	1.38
2	7.87 -12.20	**	16.93	6.06	1.38
	**				

Chd	Appd	p_2213417107 File
2003-01-20 Date	2213417107	
R&M MATERIALS HANDLING INC.	R&M Materials Handling Inc.	
	4501 Gateway Blvd, Springfield	
	LM05 PT HOIST	Issue 05/2010