Dimensions are for reference in estimating only. Use of various modifications may affect overall dimensional outline. Where dimensions are critical, request certified drawings for construction. All dimensions are in millimeters unless otherwise noted.

2213417080

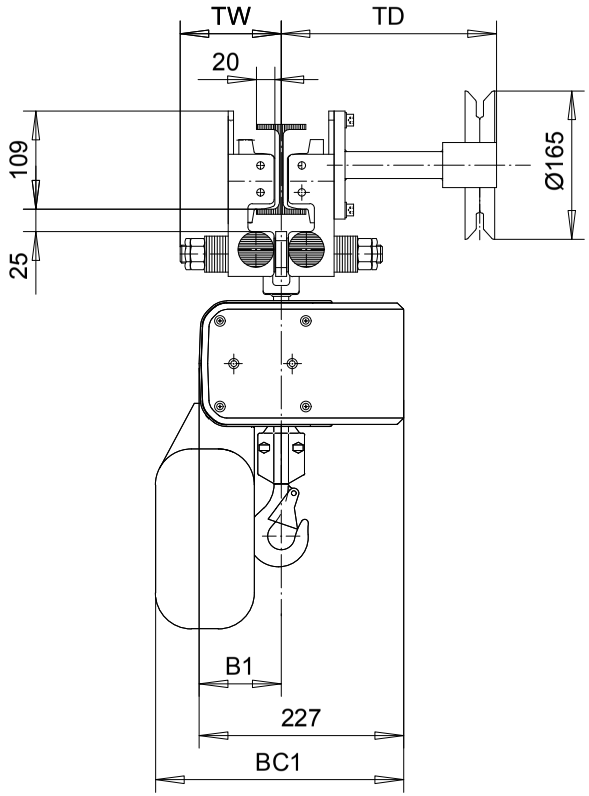

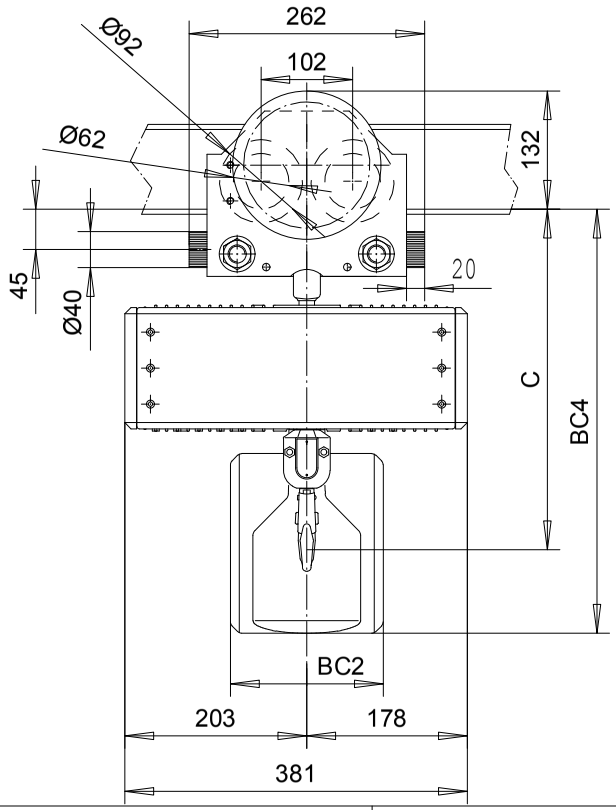

	C	B1	BC1				BC2				BC4			
			< 8m	< 16m	< 30m	< 50m	< 8m	< 16m	< 30m	< 50m	< 8m	< 16m	< 30m	< 50m
1 FALL	427	91	276	316	311	311	170	160	160	320	470	530	595	595
			< 4m	< 8m	< 15m	< 25m	< 4m	< 8m	< 15m	< 25m	< 4m	< 8m	< 15m	< 25m
2 FALLS	502	112	276	316	311	311	170	160	160	320	470	530	595	595

LOADMATE CHAIN HOIST MODEL NUMBER							
FR	CAP Kg	LIFT m	SUSP	1 SPEED m/MIN	2 SPEED m/MIN(4:1)	FALL	FLG CODE
LM05	250	3	HGX	4.9S,9.8S	9.8T	1	1 - 5
LM05	500	3	HGX	4.9S,9.8S	9.8T	1	1 - 5
LM05	1000	3	HGX	---	4.9T	2	1 - 5

TROLLEY DIMENSIONS					
FLG CODE	FLANGE RANGES	MAX. TD	MAX. TW	MIN. WS	MAX FLG THK
1	58 - 100	262	113	---	20
2	106 - 150	287	135	---	20
3	155 - 200	312	160	---	20
4	206 - 248	336	185	---	20
5	260 - 307	366	215	---	20

Chd	Appd	p_2213417080 File
2003-04-08 Date	2213417080	
R&M MATERIALS HANDLING INC.	R&M Materials Handling Inc.	
	4501 Gateway Blvd, Springfield	
	LM05 HGX	Issue 05/2010