Dimensions are for reference in estimating only. Use of various modifications may affect overall dimensional outline. Where dimensions are critical, request certified drawings for construction. All dimensions are in inches unless otherwise noted.

2213417079

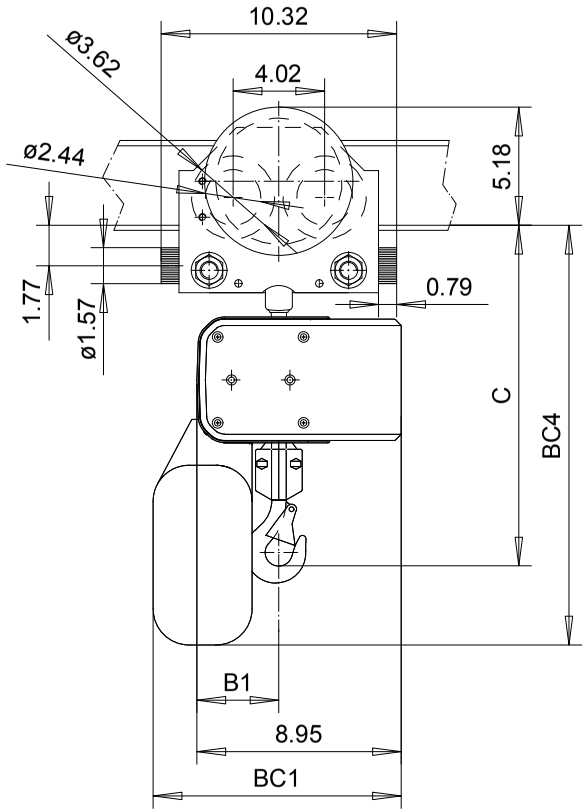

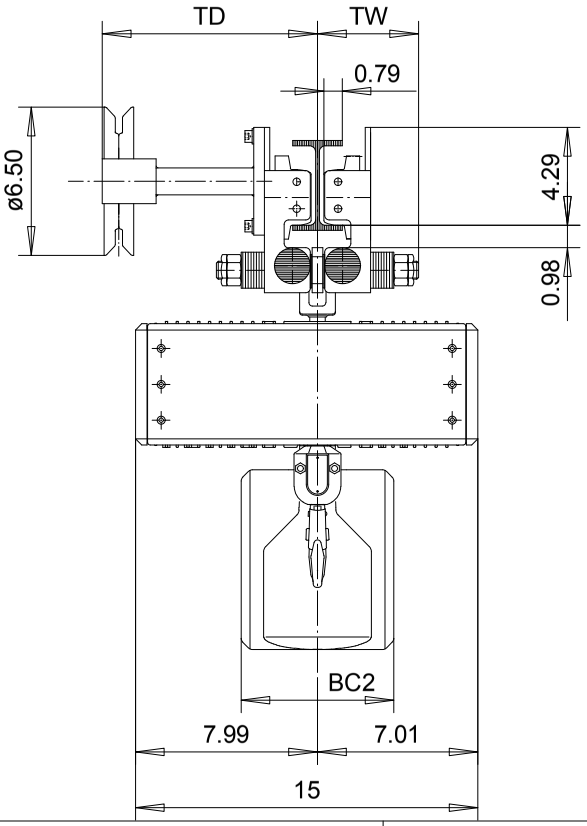

	C	B1	BC1				BC2				BC4			
LIFT			< 25ft	< 50ft	< 100ft	< 150ft	< 25ft	< 50ft	< 100ft	< 150ft	< 25ft	< 50ft	< 100ft	< 150ft
1 FALL	16 3/4"	3.58	10.87	12.44	12.24	12.24	6.69	6.30	6.30	12.60	18.50	20.87	23.43	23.43
LIFT			< 13ft	< 25ft	< 50ft	< 75ft	< 13ft	< 25ft	< 50ft	< 75ft	< 13ft	< 25ft	< 50ft	< 75ft
2 FALLS	19 3/4"	4.41	10.87	12.44	12.24	12.24	6.69	6.30	6.30	12.60	18.50	20.87	23.43	23.43

LOADMATE CHAIN HOIST MODEL NUMBER							FLG CODE
FR	CAP TON	LIFT FT	SUSP	1 SPEED FPM	2 SPEED FPM(4:1)	FALL	
LM05	1/4	10	HG	16S,32S	32T	1	1 - 5
LM05	1/2	10	HG	16S,32S	32T	1	1 - 5
LM05	1	10	HG	---	16T	2	1 - 5

TROLLEY DIMENSIONS					
FLG CODE	FLANGE RANGES	MAX. TD	MAX. TW	MIN. WS	MAX FLG THK
1	2.28 - 3.94	10.32	4.43	---	.79
2	4.17 - 5.90	11.30	5.31	---	.79
3	6.10 - 7.87	12.29	6.30	---	.79
4	8.11 - 9.76	13.23	7.28	---	.79
5	10.23-12.09	14.40	8.46	---	.79

KHSJST Chd	Appd	p_2213417079 File
2003-04-07 Date	2213417079	
R&M MATERIALS HANDLING INC.	R&M Materials Handling Inc.	
	4501 Gateway Blvd, Springfield	
	LM05 HG	Issue 05/2010