Dimensions are for reference in estimating only. Use of various modifications may affect overall dimensional outline. Where dimensions are critical, request certified drawings for construction. All dimensions are in inches unless otherwise noted.

2213417082

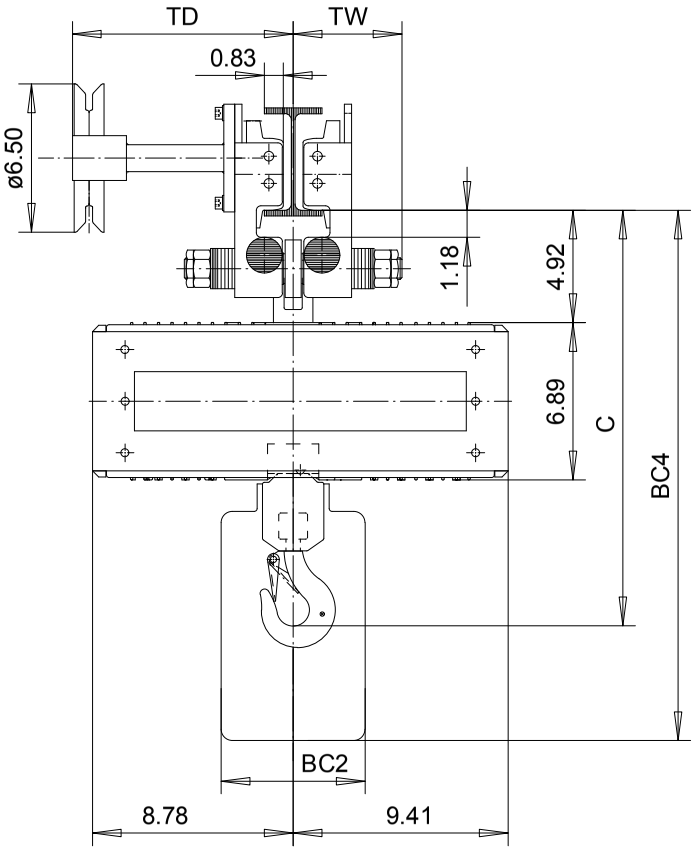

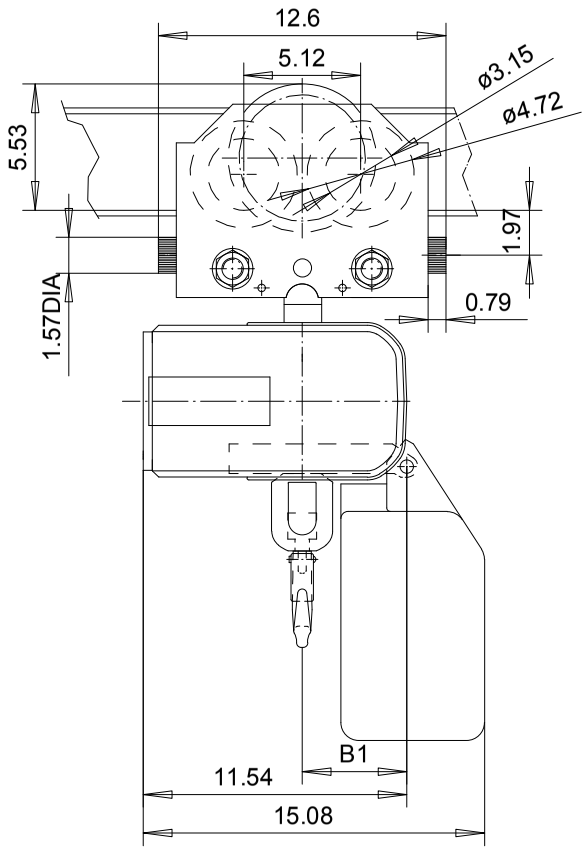

	C	B1	BC2				BC4			
LIFT	---	---	< 12ft	< 25ft	< 50ft	< 75ft	< 12ft	< 25ft	< 50ft	< 75ft
2 FALLS	23 1/2"	5.71	6.30	5.91	12.60	12.60	23.23	25.79	25.79	30.51

LOADMATE CHAIN HOIST MODEL NUMBER

FR	CAP TON	LFT FT	SUSP	1 SPEED FPM	2 SPEED FPM(4:1)	FALL	FLG CODE
LM10	2	10	HG	8S,16S	16T	2	1 - 4

TROLLEY DIMENSIONS

FLG CODE	FLANGE RANGES	MAX. TD	MAX. TW	MIN. WS	MAX FLG THK
1	2.52 - 4.96	10.32	5.12	---	.98
2	5.16 - 7.48	12.09	6.40	---	.98
3	7.80 - 9.76	13.23	7.68	---	.98
4	10.24-12.20	14.45	9.06	---	.98

KHSJST Chd	Appd	p_2213417082 File
2003-04-08 Date	2213417082	
R&M MATERIALS HANDLING INC.	R&M Materials Handling Inc.	
	4501 Gateway Blvd, Springfield	
	LM10 HG	Issue 05/2010