Dimensions are for reference in estimating only. Use of various modifications may affect overall dimensional outline. Where dimensions are critical, request certified drawings for construction. All dimensions are in millimeters unless otherwise noted.

2213417060

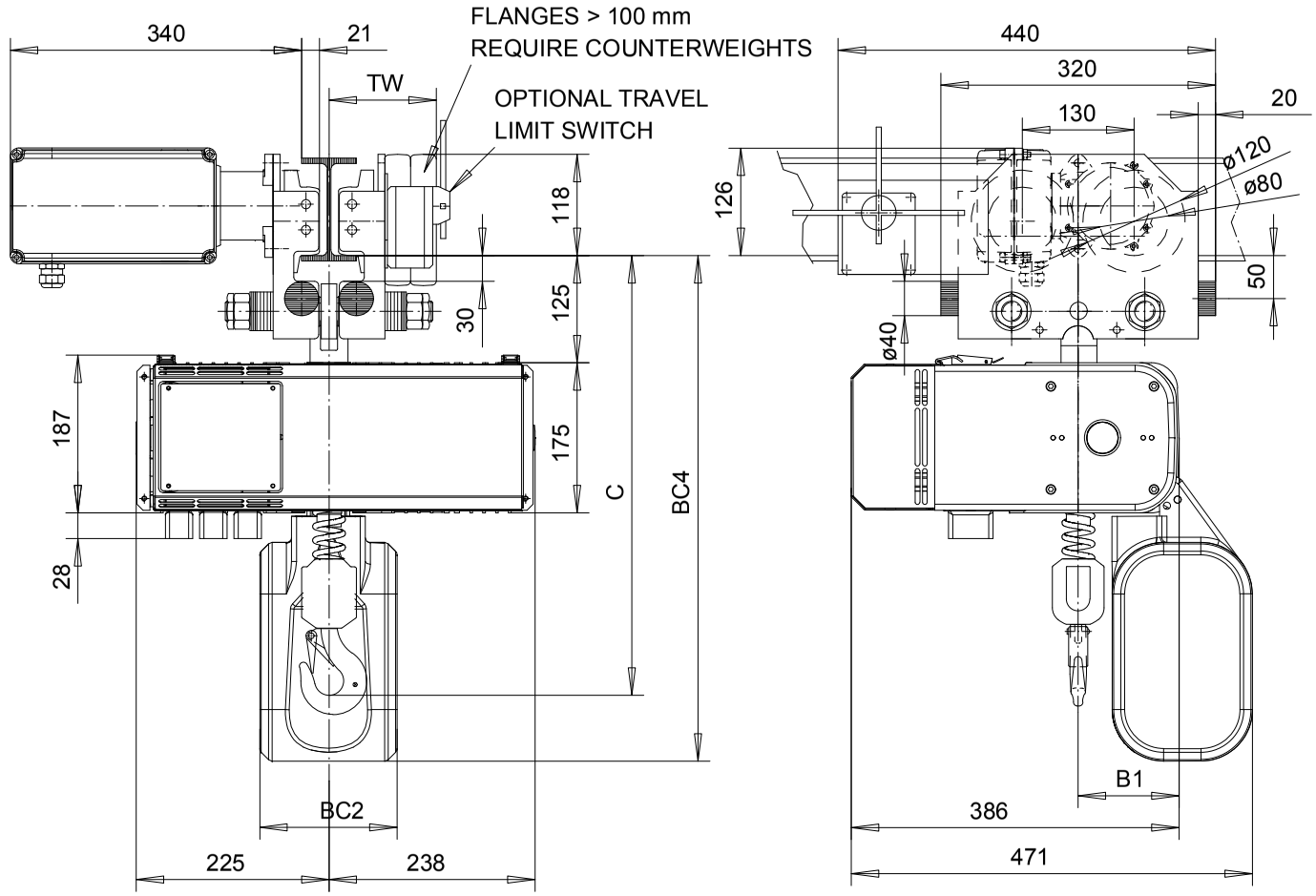

	C	B1	BC2				BC4			
LIFT	---	---	< 4m	< 8m	< 15m	< 25m	< 4m	< 8m	< 15m	< 25m
2 FALLS	600	145	160	150	320	320	590	655	655	775

LOADMATE CHAIN HOIST MODEL NUMBER

FR	CAP kg	LFT m	SUSP	1 SPEED m/MIN	VFD m/MIN(4:1)	FALL	FLG CODE
LM10	2000	3	MT	---	4.9I	2	1 - 4

TROLLEY DIMENSIONS

FLG CODE	FLANGE RANGES		MAX. TW	MIN. WS	MAX FLG THK
1	64 - 126	---	156	---	25
2	131 - 190	---	188	---	25
3	198 - 248	---	217	---	25
4	260 - 310	---	248	---	25

VFD HOIST, TWO-SPEED TROLLEY, (C2 TROLLEY)

KHSJST Chd	Appd	2213417116.vxp File
2003-03-11 Date	2213417116	
R&M MATERIALS HANDLING INC.	R&M Materials Handling Inc.	
	4501 Gateway Blvd, Springfield	
	VFD LM10 MT; 2SPD TROLLEY	Issue 05/2010