Dimensions are for reference in estimating only. Use of various modifications may affect overall dimensional outline. Where dimensions are critical, request certified drawings for construction. All dimensions are in millimeters unless otherwise noted.

2213417071

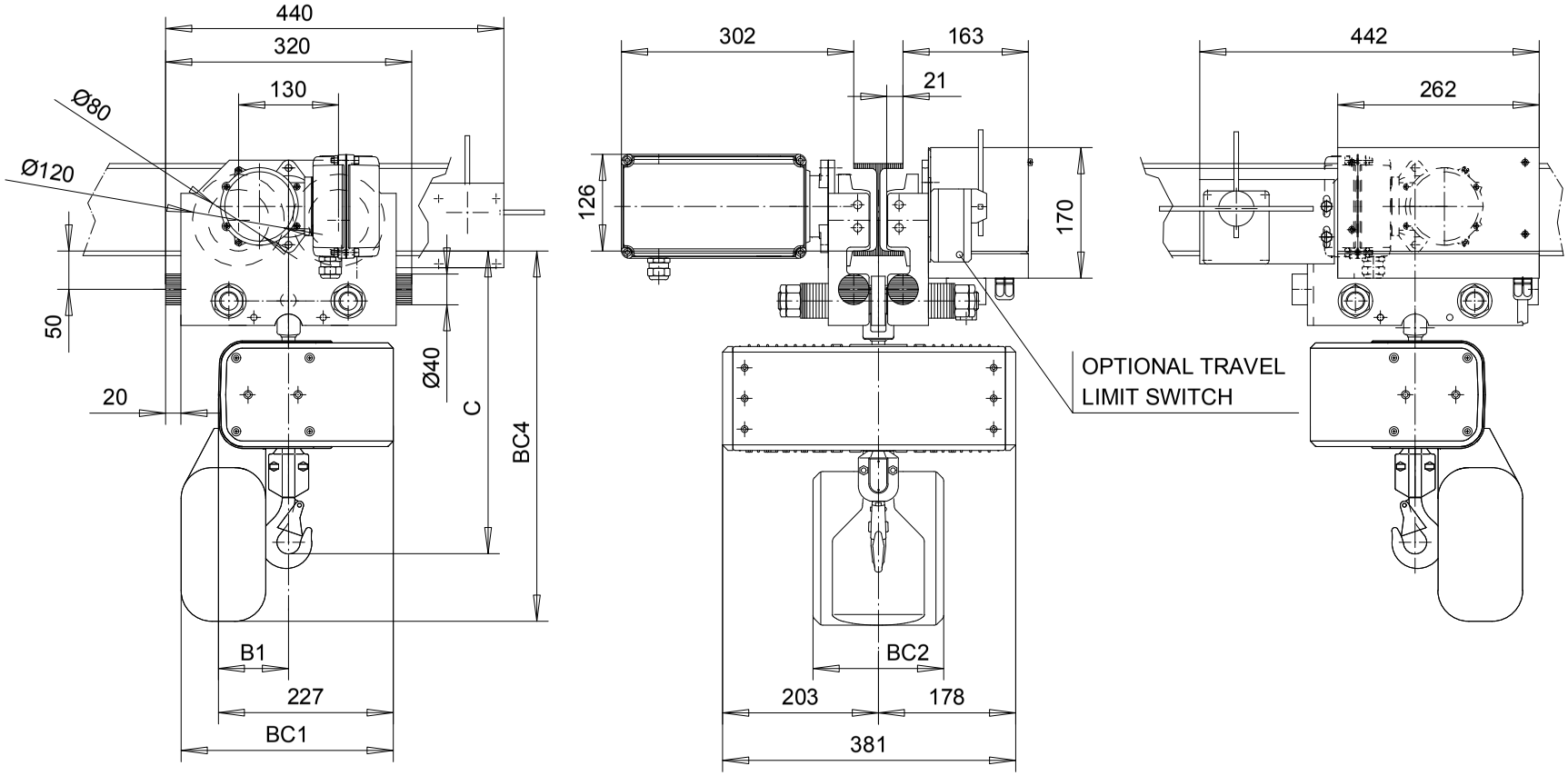

	C	B1	BC1				BC2				BC4			
LIFT			<8m	<16m	<30m	<50m	<8m	<16m	<30m	<50m	<8m	<16m	<30m	<50
1 FALL	445	91	276	316	311	311	170	160	160	320	486	546	635	635
LIFT			<4m	<8m	<15m	<25m	<4m	<8m	<15m	<25m	<4m	<8m	<15m	<25
2 FALL	502	112	276	316	311	311	170	160	160	320	486	546	635	635

LOADMATE CHAIN HOIST MODEL NUMBER							
FR	CAP kg	LIFT m	SUSP	1 SPEED m/MIN	2 SPEED m/MIN(4:1)	FALL	FLG CODE
LM05	250	3	MT	4.9S,9.8S	9.8T	1	1 - 4
LM05	500	3	MT	4.9S,9.8S	9.8T	1	1 - 4
LM05	1000	3	MT	---	4.9T	2	1 - 4

TROLLEY DIMENSIONS					
FLG CODE	FLANGE RANGES	MAX. TD	MAX. TW	MIN. WS	MAX FLG THK
1	64 - 126	---	---	---	25
2	131 - 190	---	---	---	25
3	198 - 248	---	---	---	25
4	260 - 310	---	---	---	25

KHSJST Chd	Appd	p_2213417071 File
2003-03-17 Date	2213417071	
R&M MATERIALS HANDLING INC.	R&M Materials Handling Inc.	
	4501 Gateway Blvd, Springfield	
	LM05 MT,VFD TROLLEY	Issue 05/2010