Dimensions are for reference in estimating only. Use of various modifications may affect overall dimensional outline. Where dimensions are critical, request certified drawings for construction. All dimensions are in millimeters unless otherwise noted.

2213417074

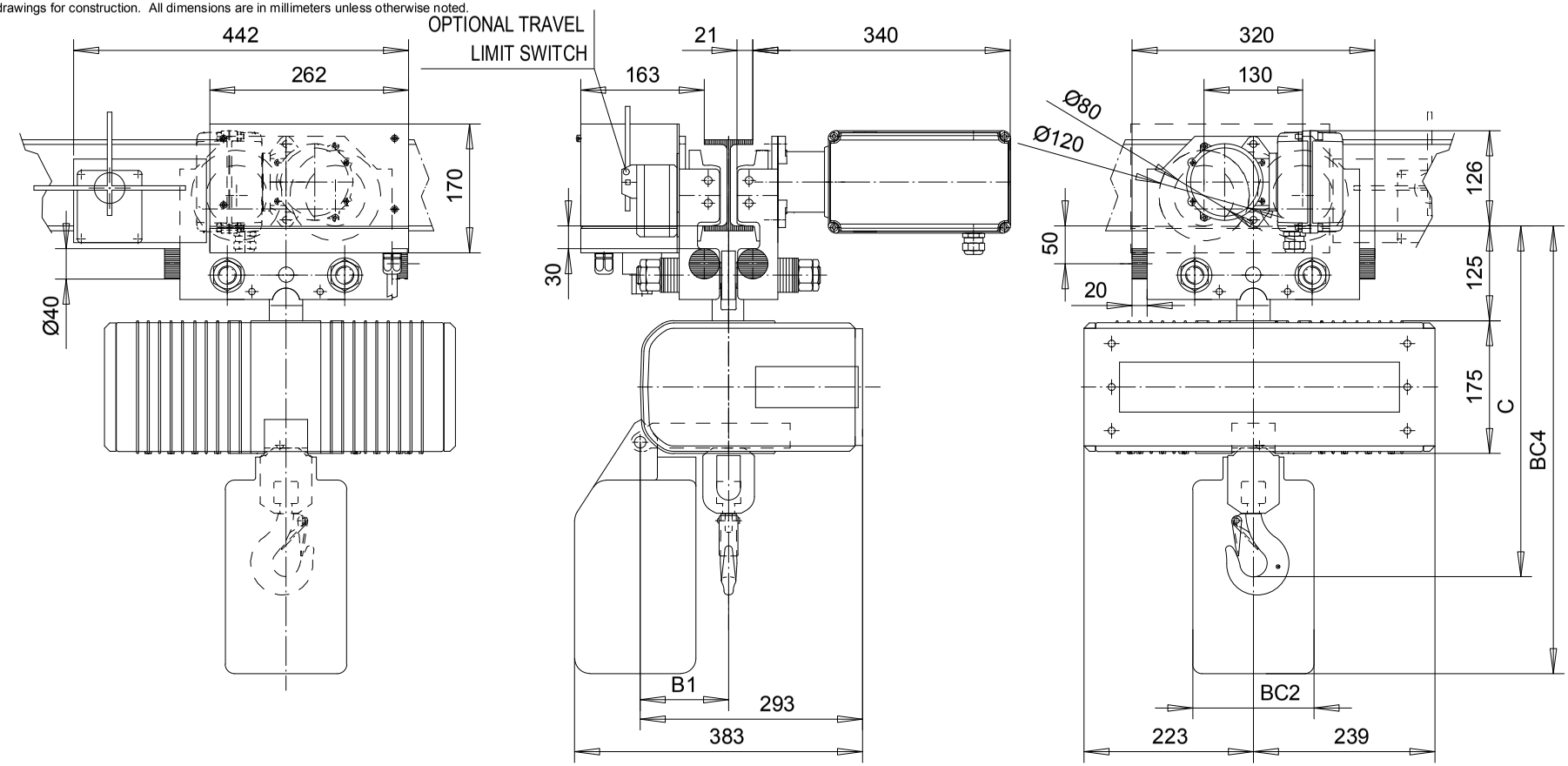

	C	B1	BC2				BC4			
LIFT	---	---	< 8m	< 16m	< 30m	< 50m	< 8m	< 16m	< 30m	< 50m
1 FALL	535	116	160	150	320	320	590	655	655	775
LIFT	---	---	< 4m	< 8m	< 15m	< 25m	< 4m	< 8m	< 15m	< 25m
2 FALLS	600	145	160	150	320	320	590	655	655	775

LOADMATE CHAIN HOIST MODEL NUMBER							FLG CODE
FR	CAP kg	LFT m	SUSP	1 SPEED m/MIN	2 SPEED m/MIN(4:1)	FALL	
LM10	500	3	MTX	---	19.5T	1	1 - 4
LM10	1000	3	MTX	4.9S,9.8S	9.8T	1	1 - 4
LM10	2000	3	MTX	2.4S,4.9S	4.9T	2	1 - 4

TROLLEY DIMENSIONS					
FLG CODE	FLANGE RANGES	MAX. TD	MAX. TW	MIN. WS	MAX FLG THK
1	64 - 126	---	---	---	25
2	131 - 190	---	---	---	25
3	198 - 248	---	---	---	25
4	260 - 310	---	---	---	25

Chd	Appd	p_2213417074 File
2003-03-24 Date	2213417074	
R&M MATERIALS HANDLING INC.	R&M Materials Handling Inc.	
	4501 Gateway Blvd, Springfield	
	LM10 MTX,VFD TROLLEY	Issue 05/2010