Dimensions are for reference in estimating only. Use of various modifications may affect overall dimensional outline. Where dimensions are critical, request certified drawings for construction. All dimensions are in millimeters unless otherwise noted.

2213417065

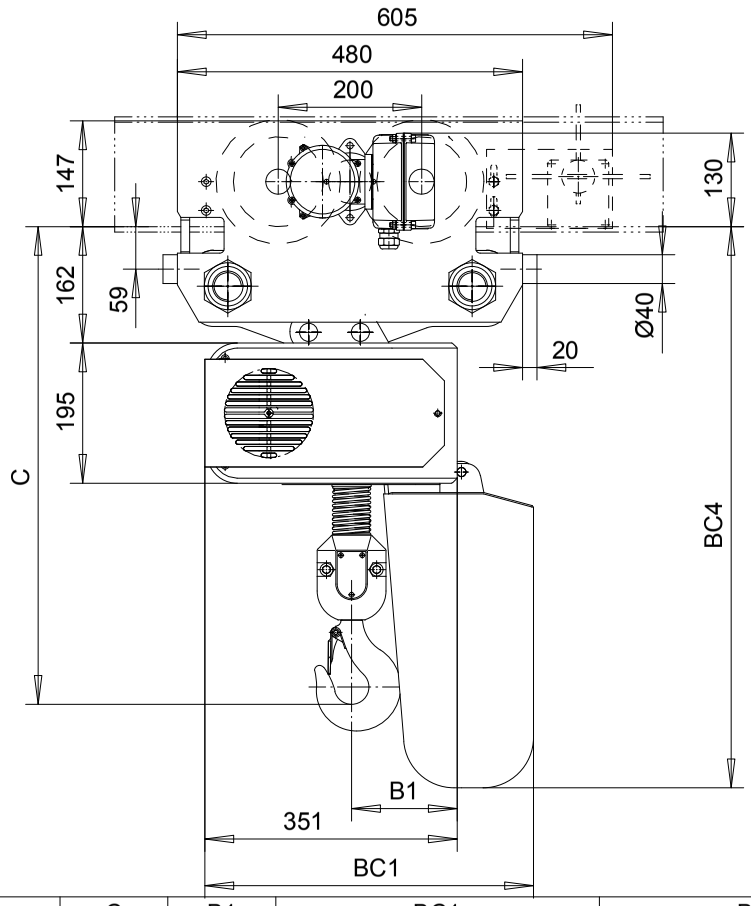

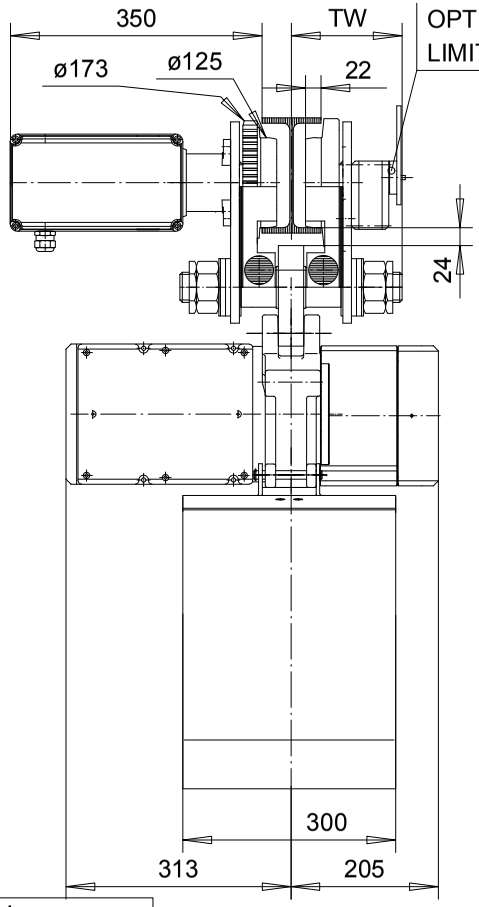

OPTIONAL TRAVEL LIMIT SWITCH

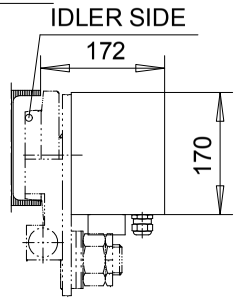

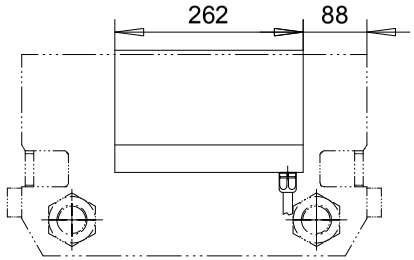

SECOND ELECTRICAL ENCLOSURE IS REQUIRED FOR OPTIONAL INVERTER CONTROLLED TROLLEY.

	C	B1	BC1			BC4		
LIFT	---	---			> 30m			> 30m
1 FALLS	646	147			700			1118
LIFT	---	---	< 6m	< 15m	< 25m	< 6m	< 15m	< 25m
2 FALLS	787	196	457	630	700	781	942	1142

FOR LIFTS UNDER 30m ON 1-FALL UNITS, SEE PAGE 1 OF 2

LOADMATE CHAIN HOIST MODEL NUMBER

FR	CAP kg	LFT m	SUSP	1 SPEED m/MIN	2 SPEED m/MIN(4:1)	FALL	FLG CODE
LM25	2500	3	MT	------	7.4T	1	1 - 5
LM25	5000	3	MT	------	3.7T	2	1 - 5

TROLLEY DIMENSIONS

FLG CODE	FLANGE RANGES	MAX. TD	MAX. TW	MIN. WS	MAX. FLG THK
1	82 - 110	---	155	---	20
2	113 - 150	---	170	---	20
3	155 - 200	---	190	---	20
4	206 - 248	---	218	---	20
5	260 - 310	---	245	---	20

KHSJST Chd	Appd	p_2213417065 File
2003-03-07 Date	2213417065	
R&M MATERIALS HANDLING INC.	R&M Materials Handling Inc.	
	4501 Gateway Blvd, Springfield	
	LM25 MT HOIST	Issue 5/2010