Dimensions are for reference in estimating only. Use of various modifications may affect overall dimensional outline. Where dimensions are critical, request certified drawings for construction. All dimensions are in inches unless otherwise noted.

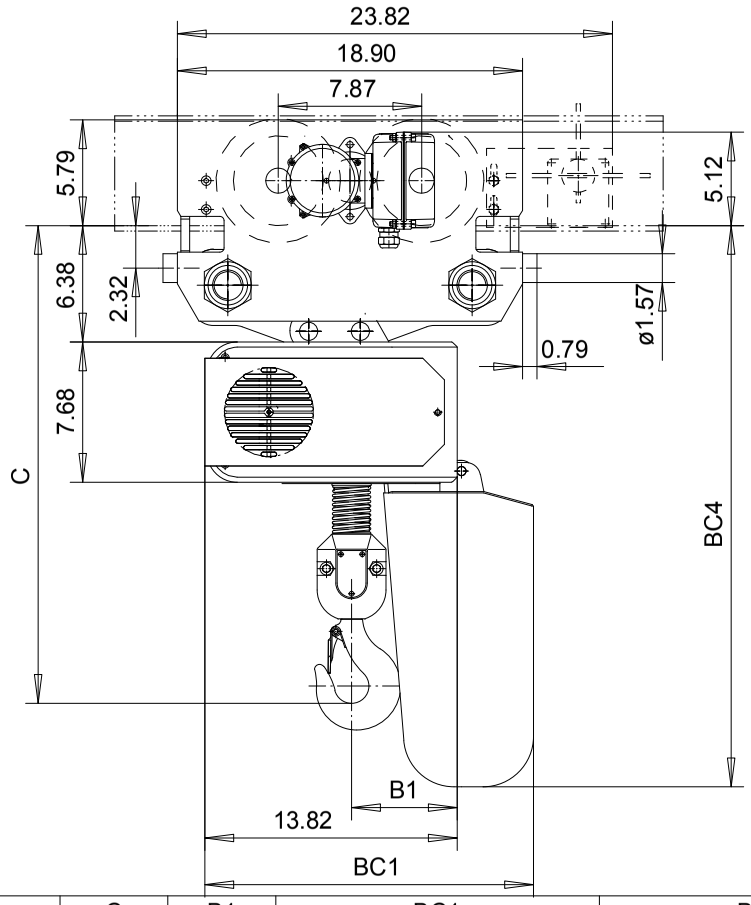

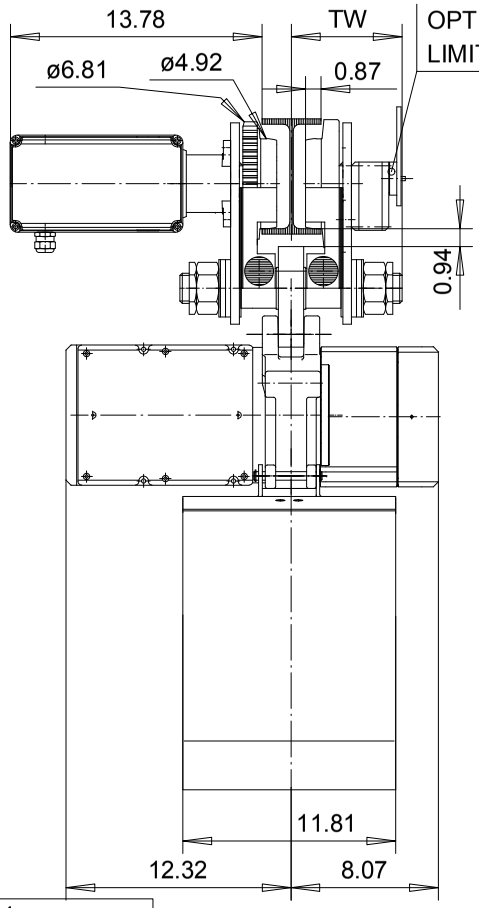

OPTIONAL TRAVEL LIMIT SWITCH

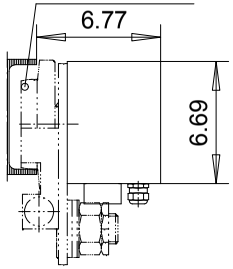

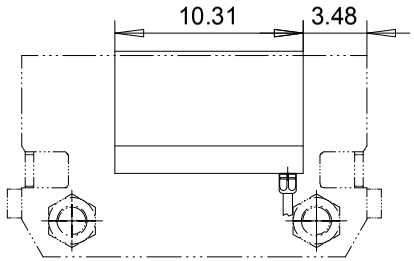

SECOND ELECTRICAL ENCLOSURE IS REQUIRED FOR OPTIONAL INVERTER CONTROLLED TROLLEY.

	C	B1	BC1			BC4		
LIFT	---	---			> 100ft			> 100ft
1 FALLS	25 1/2"	5.79			27.56			44.02
LIFT	---	---	< 20ft	< 50ft	< 75ft	< 20ft	< 50ft	< 75ft
2 FALLS	31"	7.72	17.99	24.80	27.56	30.75	37.09	44.96

FOR LIFTS UNDER 100 FT ON 1-FALL UNITS, SEE PAGE 1 OF 2

LOADMATE CHAIN HOIST MODEL NUMBER

FR	CAP TON	LFT FT	SUSP	1 SPEED FPM	2 SPEED FPM(4:1)	FALL	FLG CODE
LM25	3	10	MT	------	24T	1	1 - 5
LM25	5	10	MT	------	12T	2	1 - 5

TROLLEY DIMENSIONS

FLG CODE	FLANGE RANGES	MAX. TD	MAX. TW	MIN. WS	MAX. FLG THK
1	3.23 - 4.33	---	6.10	---	0.79
2	4.45 - 5.90	---	6.69	---	0.79
3	6.10 - 7.87	---	7.48	---	0.79
4	8.11 - 9.76	---	8.58	---	0.79
5	10.24-12.20	---	9.65	---	0.79

KHSJST Chd	Appd	p_2213417065 File
2003-03-07 Date	2213417065	
R&M MATERIALS HANDLING INC.	R&M Materials Handling Inc.	
	4501 Gateway Blvd, Springfield	
	LM25 MT HOIST	Issue 5/2010

2213417065