2213417055

Dimensions are for reference in estimating only. Use of various modifications may affect overall dimensional outline. Where dimensions are critical, request certified drawings for construction. All dimensions are in millimeters unless otherwise noted.

**see outline drawing 2213417054 for dimensions when capacity is 500 kg or less.

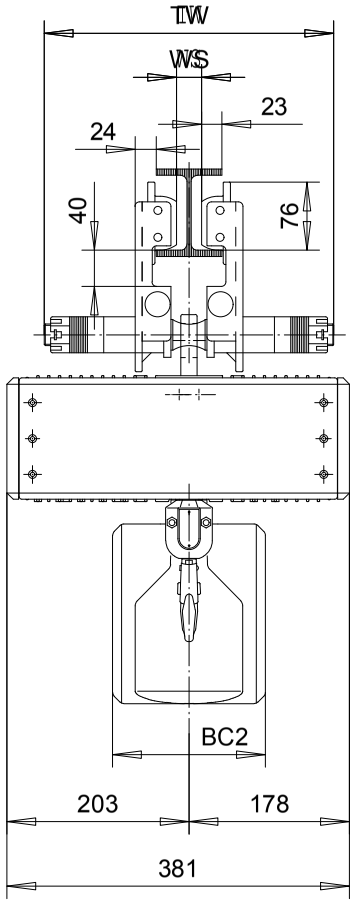

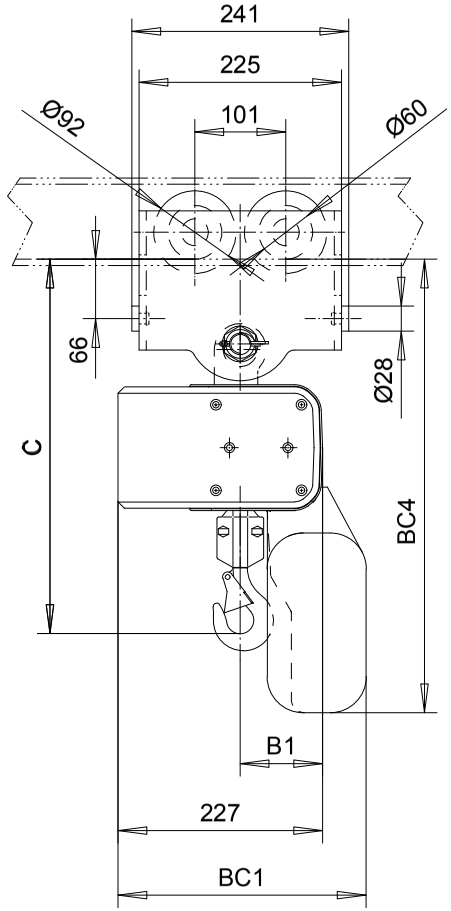

Minimum radius curve: 1 meter

	C	B1	BC1				BC2				BC4			
LIFT			< 4m	< 8m	< 15m	< 25m	< 4m	< 8m	< 15m	< 25m	< 4m	< 8m	< 15m	< 25m
2 FALLS	525	112	276	316	311	311	160	150	320	320	508	568	633	633

LOADMATE CHAIN HOIST MODEL NUMBER

FR	CAP kg	LIFT m	SUSP	1 SPEED m/MIN	2 SPEED m/MIN(4:1)	FALL	FLG CODE
LM05	1000	3	PT	---	4.9T	2	1,2

TROLLEY DIMENSIONS

FLG CODE	FLANGE RANGES	MAX. TD	MAX TW	MIN. WS	MAX FLG THK
1	65 - 200	**	322	19	35
2	200 - 310	**	430	154	35
	**				

Chd	Appd	p_2213417055 File
2003-01-20 Date	2213417055	
R&M MATERIALS HANDLING INC.	R&M Materials Handling Inc.	
	4501 Gateway Blvd, Springfield	
	LM05 PT HOIST	Issue 05/2010