Dimensions are for reference in estimating only. Use of various modifications mayaffect overall dimensional outline.
Where dimensions are critical, request certified drawings for construction. All dimensions are in millimeters unless otherwise noted.

2213417112

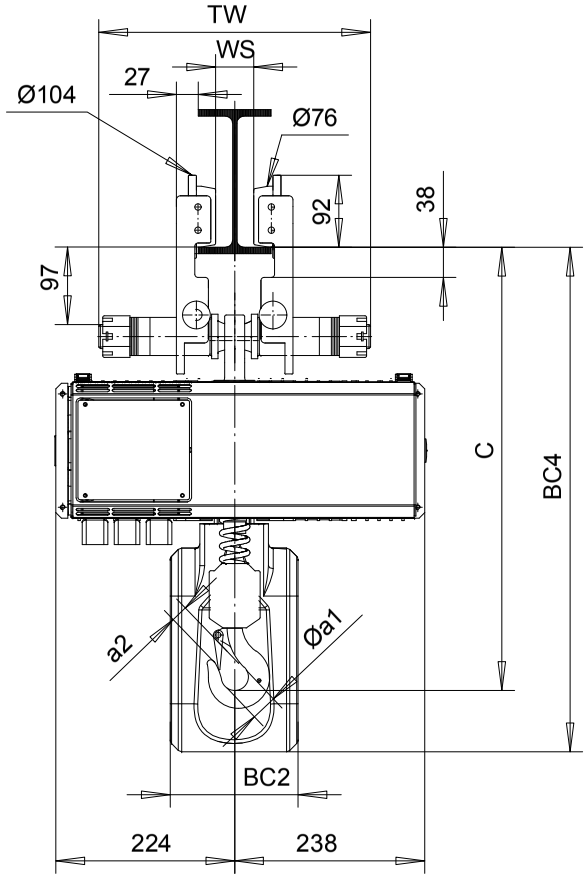

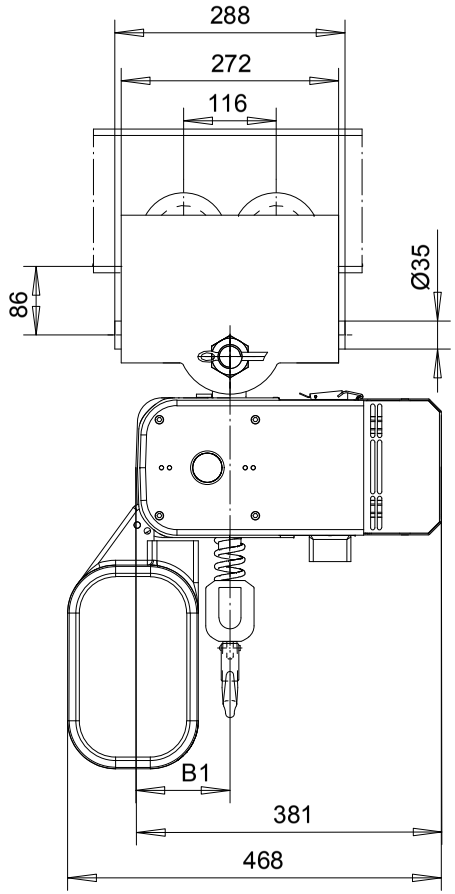

	C	B1	BC2				BC4				øa1	a2
LIFT			<8m	<16m	<30m	<50m	<8m	<16m	<30m	<50m		
1 FALL	575	116	160	150	320	320	630	695	695	815	36	20
LIFT			<4m	<8m	<15m	<25m	<4m	<8m	<15m	<25m		
2 FALLS	640	145	160	150	320	320	630	695	695	815	43	26

LOADMATE CHAIN HOIST MODEL NUMBER							FLG CODE
FR	CAP kg	LIFT m	SUSP	VFD SPEED m/MIN		FALL	
LM10	500	3	TH	19.5 I		1	1,2
LM10	1000	3	TH	9.8 I		1	1,2
LM10	2000	3	TH	4.9 I		2	1,2

TROLLEY DIMENSIONS					
FLG CODE	FLANGE RANGES	MAX. TD	MAX. TW	MIN. WS	MAX. FLG THK
1	88 - 200	**	340	44	33
2	188 - 310	**	448	144	33

KHSJST Chd	Appd	2213417112 File
2007-20-02	2213417112	
R&M MATERIALS HANDLING INC.	R&M Materials Handling Inc.	
	4501 Gateway Blvd, Springfield	
	LM10 PT VFD HOIST	Issue 05/2010