Dimensions are for reference in estimating only. Use of various modifications may affect overall dimensional outline.
Where dimensions are critical, request certified drawings for construction. All dimensions are in inches unless otherwise noted.

2213417112

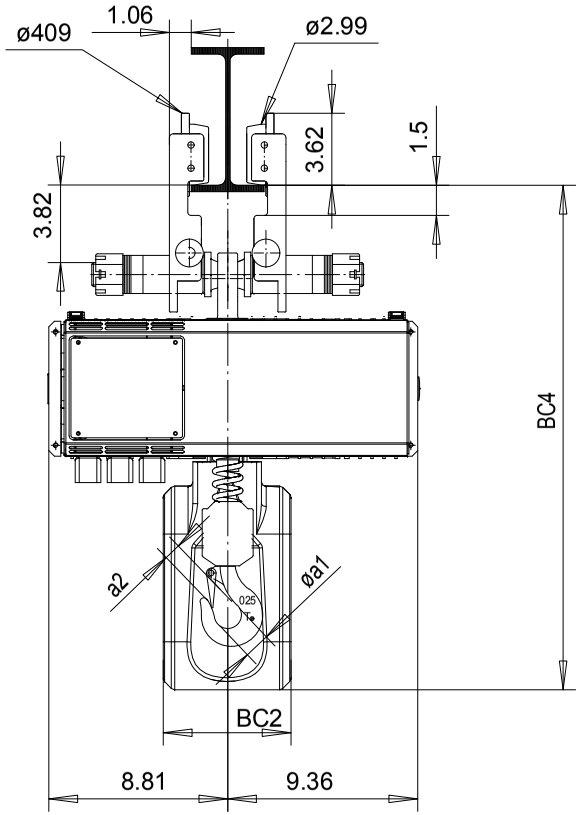

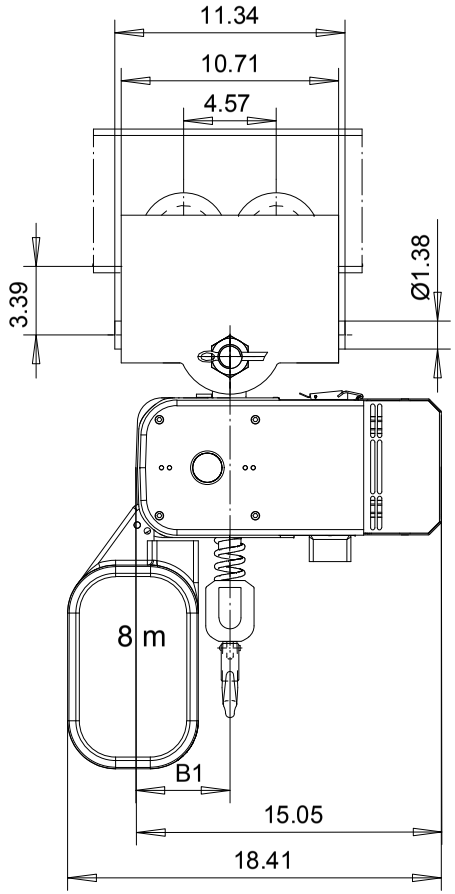

	C	B1	BC2				BC4				øa1	a2
LIFT			< 25ft	< 50ft	< 100ft	< 150ft	< 25ft	< 50ft	< 100ft	< 150ft		
1 FALL	22 3/4"	4.57	6.30	5.91	12.60	12.60	25.39	27.95	27.95	32.68	1.42	.79
LIFT			< 13ft	< 25ft	< 50ft	< 75ft	< 13ft	< 25ft	< 50ft	< 75ft		
2 FALLS	25 1/4"	5.71	6.30	5.91	12.60	12.60	25.39	27.95	27.95	32.68	1.69	1.02

LOADMATE CHAIN HOIST MODEL NUMBER							FLG CODE
FR	CAP TON	LIFT FT	SUSP	VFD SPEED FPM		FALL	
LM10	1/2	10	TH	64 I		1	1,2
LM10	1	10	TH	32 I		1	1,2
LM10	2	10	TH	16 I		2	1,2

TROLLEY DIMENSIONS					
FLG CODE	FLANGE RANGES	MAX. TD	MAX. TW	MIN. WS	MAX. FLG THK
1	3.47 - 7.87	**	13.39	1.73	1.30
2	7.40 - 12.20	**	17.64	5.67	1.30

KHSJST Chd	Appd	2213417112 File
2007-20-02	2213417112	
R&M MATERIALS HANDLING INC.	R&M Materials Handling Inc.	
	4501 Gateway Blvd, Springfield	
	LM10 PT VFD HOIST	Issue 05/2010