Dimensions are for reference in estimating only. Use of various modifications mayaffect overall dimensional outline.
Where dimensions are critical, request certified drawings for construction. All dimensions are in millimeters unless otherwise noted.

2213417111

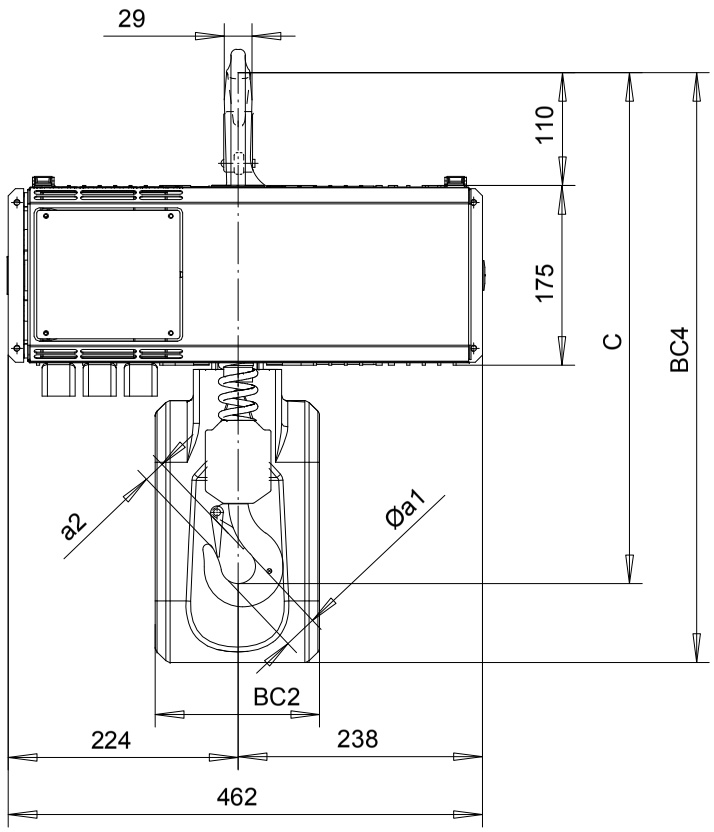

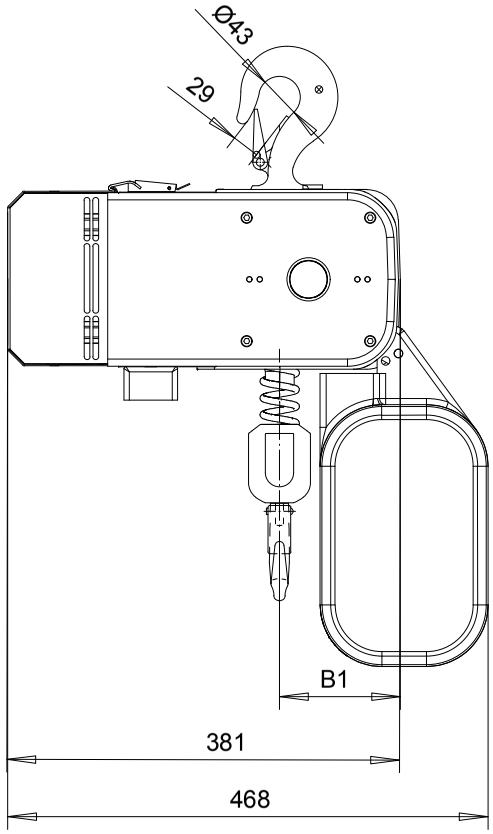

	C	B1	BC2				BC4				øa1	a2
LIFT			< 8m	< 16m	< 30m	< 46m	< 8m	< 16m	< 30m	< 46m		
1 FALL	518	118	168	153	321	321	575	642	642	762	36	20
LIFT			< 4m	< 8m	< 15m	< 23m	< 4m	< 8m	< 15m	< 23m		
2 FALLS	583	146	168	153	321	321	575	642	642	762	43	26

LOADMATE CHAIN HOIST MODEL NUMBER							FLG CODE
FR	CAP kg	LIFT m	SUSP	VFD SPEED m/MIN		FALL	
LM10	500	3	TH	19.5 I		1	---
LM10	1000	3	TH	9.8 I		1	---
LM10	2000	3	TH	4.9 I		2	---

TROLLEY DIMENSIONS					
FLG CODE	FLANGE RANGES	MAX. TD	MAX. TW	MIN. WS	MAX. FLG THK
---	---	---	---	---	---

KHSJST Chd	Appd	2213417111.vxp File
2007-20-02 Date	2213417111	
R&M MATERIALS HANDLING INC.	R&M Materials Handling Inc.	
	4501 Gateway Blvd, Springfield	
	LM10 TH VFD HOIST	Issue 05/2010