Dimensions are for reference in estimating only. Use of various modifications may affect overall dimensional outline. Where dimensions are critical, request certified drawings for construction. All dimensions are in millimeters unless otherwise noted.

2213417027

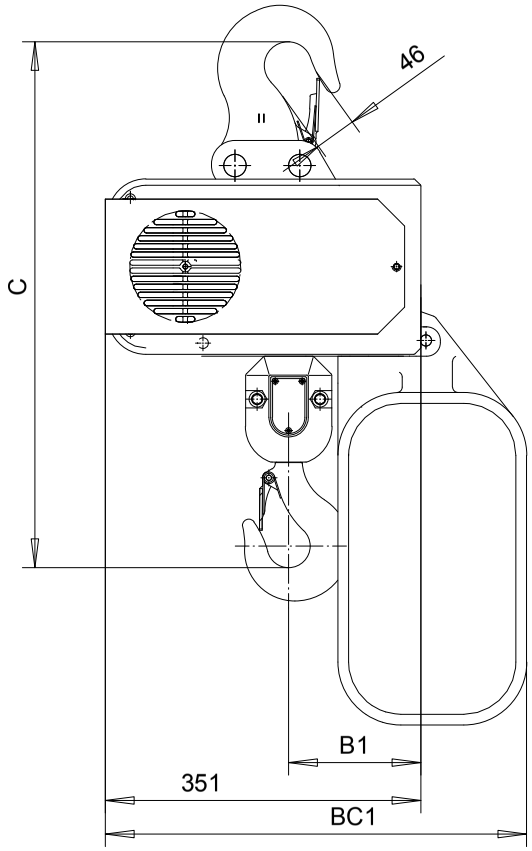

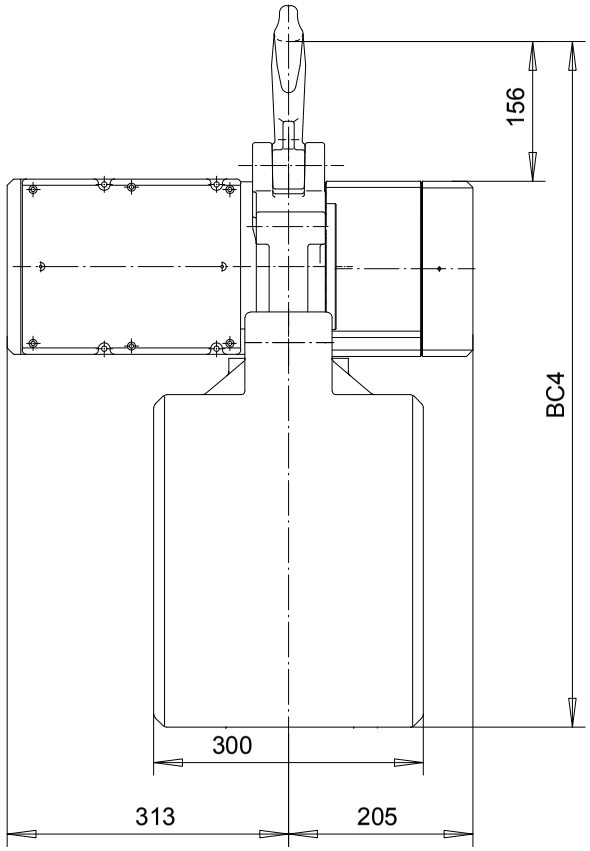

	C	B1	BC1			BC4		
LIFT			< 16m	< 30m	< 46m	< 16m	< 30m	< 46m
1 FALL	661	147	469	639	709	774	935	1135
LIFT			< 8m	< 15m	< 23m	< 8m	< 15m	< 23m
2 FALLS	787	197	469	639	709	774	935	1135

LOADMATE CHAIN HOIST MODEL NUMBER							FLG CODE
FR	CAP kg	LIFT m	SUSP	1 SPEED m/MIN	2 SPEED m/MIN(4:1)	FALL	
LM25	2500	3	TH	------	7.3T	1	---
LM25	5000	3	TH	------	3.6T	2	---

TROLLEY DIMENSIONS					
FLG CODE	FLANGE RANGES	MAX. TD	MAX. TW	MIN. WS	MAX. FLG THK
---	---	---	---	---	---

KHSJST Chd	Appd	p_2213417027 File
2000-11-03 Date	2213417027	
R&M MATERIALS HANDLING INC.	R&M Materials Handling Inc.	
	4501 Gateway Blvd, Springfield	
	LM25 TH HOIST	Issue 05/2010