2213417020

Dimensions are for reference in estimating only. Use of various modifications may affect overall dimensional outline. Where dimensions are critical, request certified drawings for construction. All dimensions are in inches unless otherwise noted.

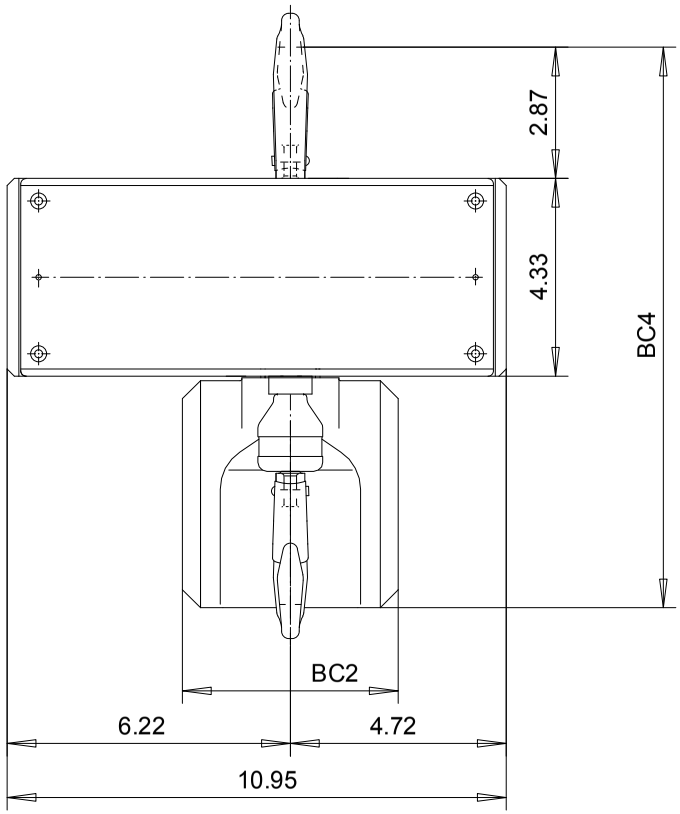

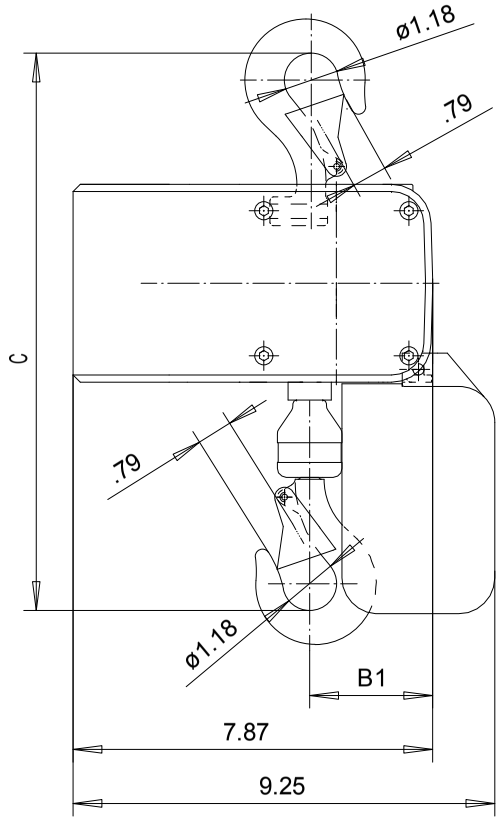

	C	B1	BC2			BC4		
LIFT			< 25ft	< 50ft	< 100ft	< 25ft	< 50ft	< 100ft
1 FALL	12 1/4"	2.68	4.72	5.12	5.12	12.28	14.72	18.07
LIFT			< 13ft	< 25ft	< 50ft	< 13ft	< 25ft	< 50ft
2 FALLS	13"	3.27	4.72	5.12	5.12	12.28	14.72	18.07

LOADMATE CHAIN HOIST MODEL NUMBER							FLG CODE
FR	CAP TON	LIFT FT	SUSP	1 SPEED FPM	2 SPEED FPM(4:1)	FALL	
LM1	1/8	10	TH	---	32T	1	---
LM1	1/8	10	TH	---	16T	2	---
LM1	1/4	10	TH	---	16T	2	---

TROLLEY DIMENSIONS					
FLG CODE	FLANGE RANGES	MAX. TD	MAX. TW	MIN. WS	MAX. FLG THK
---	---	---	---	---	---

KHSJST Chd	Appd	p_2213417020 File
2001-01-19 Date	2213417020	
R&M MATERIALS HANDLING INC.	R&M Materials Handling Inc.	
	4501 Gateway Blvd, Springfield	
	LM1 TH HOIST	Issue 05/2010