Dimensions are for reference in estimating only. Use of various modifications may affect overall dimensional outline. Where dimensions are critical, request certified drawings for construction. All dimensions are in inches unless otherwise noted.

2213417025

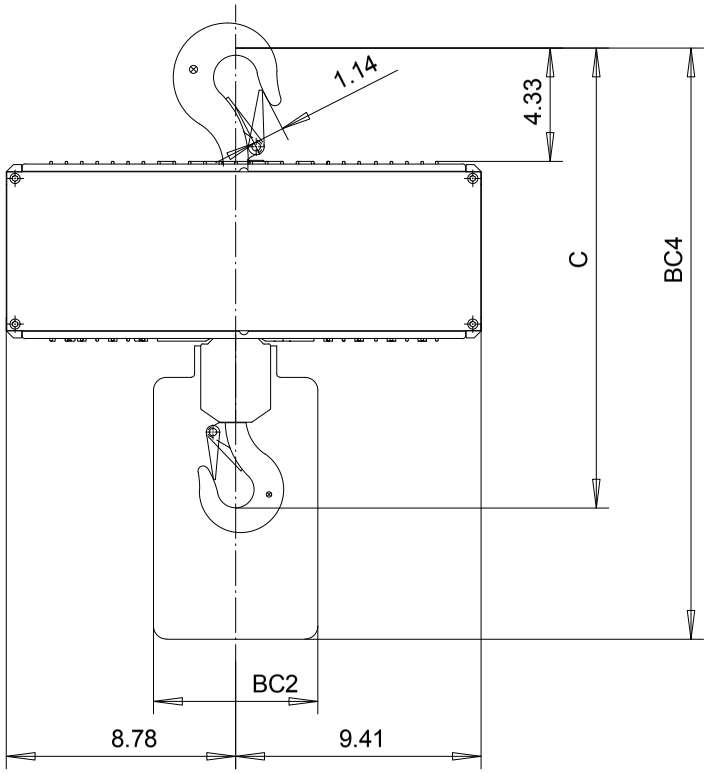

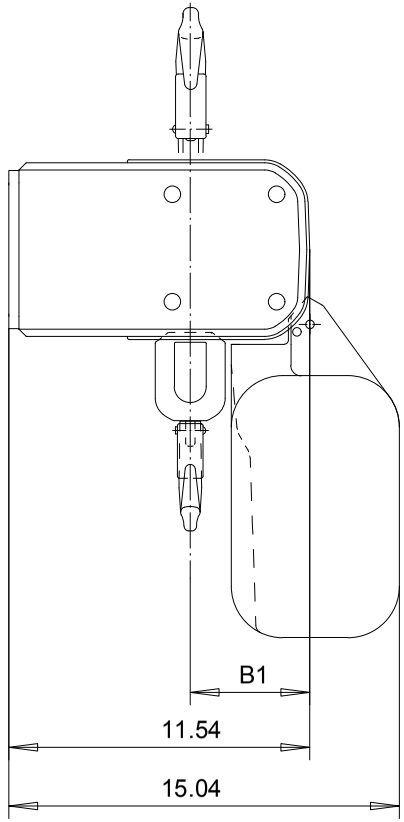

	C	B1	BC2				BC4			
LIFT			< 25ft	< 50ft	< 100ft	< 150ft	< 25ft	< 50ft	< 100ft	< 150ft
1 FALL	20 1/2"	4.65	6.61	6.02	12.64	12.64	22.64	25.28	25.28	30.00
LIFT			< 13ft	< 25ft	< 50ft	< 75ft	< 13ft	< 25ft	< 50ft	< 75ft
2 FALLS	23"	5.75	6.61	6.02	12.64	12.64	22.64	25.28	25.28	30.00

LOADMATE CHAIN HOIST MODEL NUMBER							FLG CODE
FR	CAP TON	LIFT FT	SUSP	1 SPEED FPM	2 SPEED FPM(4:1)	FALL	
LM10	1/2	10	THX	---	64T	1	---
LM10	1	10	THX	16S,32S	32T	1	---
LM10	2	10	THX	8S,16S	16T	2	---

TROLLEY DIMENSIONS					
FLG CODE	FLANGE RANGES	MAX. TD	MAX. TW	MIN. WS	MAX. FLG THK
---	---	---	---	---	---

Chd	Appd	p_2213417025 File
2000-11-03 Date	2213417025	
R&M MATERIALS HANDLING INC.	R&M Materials Handling Inc.	
	4501 Gateway Blvd, Springfield	
	LM10 THX HOIST	Issue 05/2010