Dimensions are for reference in estimating only. Use of various modifications may affect overall dimensional outline. Where dimensions are critical, request certified drawings for construction. All dimensions are in inches unless otherwise noted.

2213417027

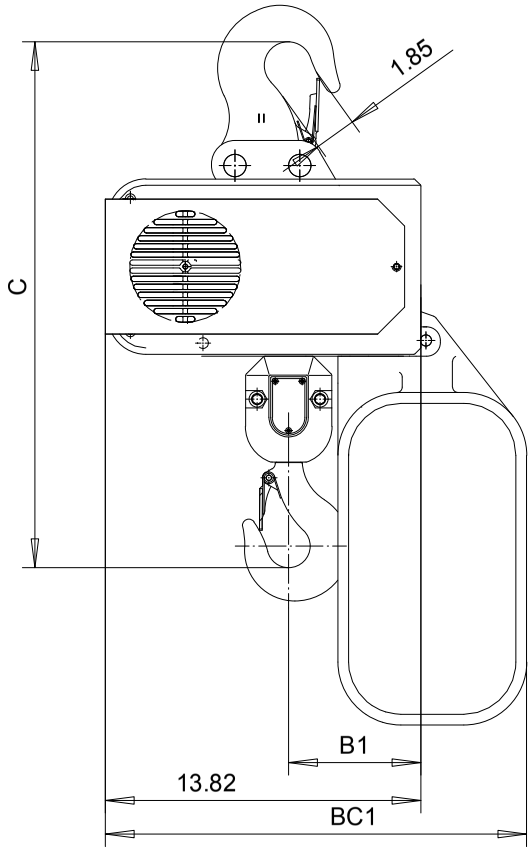

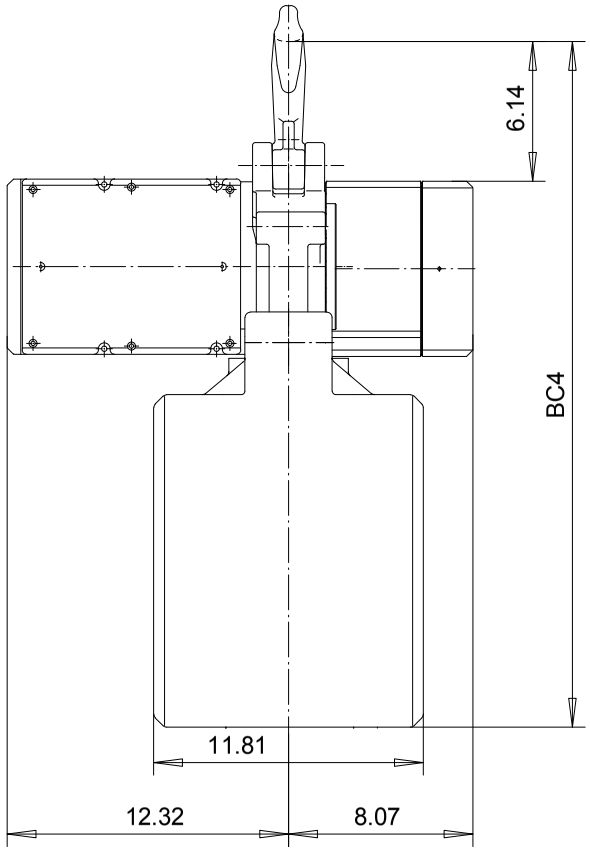

	C	B1	BC1			BC4		
LIFT			< 50ft	< 100ft	< 150ft	< 50ft	< 100ft	< 150ft
1 FALL	26"	5.79	18.47	25.16	27.91	30.47	36.11	44.69
LIFT			< 25ft	< 50ft	< 75ft	< 25ft	< 50ft	< 75ft
2 FALLS	31"	7.76	18.47	25.16	27.91	30.47	36.11	44.69

LOADMATE CHAIN HOIST MODEL NUMBER							FLG CODE
FR	CAP TON	LIFT FT	SUSP	1 SPEED FPM	2 SPEED FPM(4:1)	FALL	
LM25	3	10	TH	------	24T	1	---
LM25	5	10	TH	------	12T	2	---

TROLLEY DIMENSIONS					
FLG CODE	FLANGE RANGES	MAX. TD	MAX. TW	MIN. WS	MAX. FLG THK
---	---	---	---	---	---

KHSJST Chd	Appd	p_2213417027 File
2000-11-03 Date	2213417027	
R&M MATERIALS HANDLING INC.	R&M Materials Handling Inc.	
	4501 Gateway Blvd, Springfield	
	LM25 TH HOIST	Issue 05/2010