Updated dimensions - 12-10-2010

NORMAL HEADROOM, 4 PART SINGLE

Hoist type:

SX4 041...N0

SI-60Hz

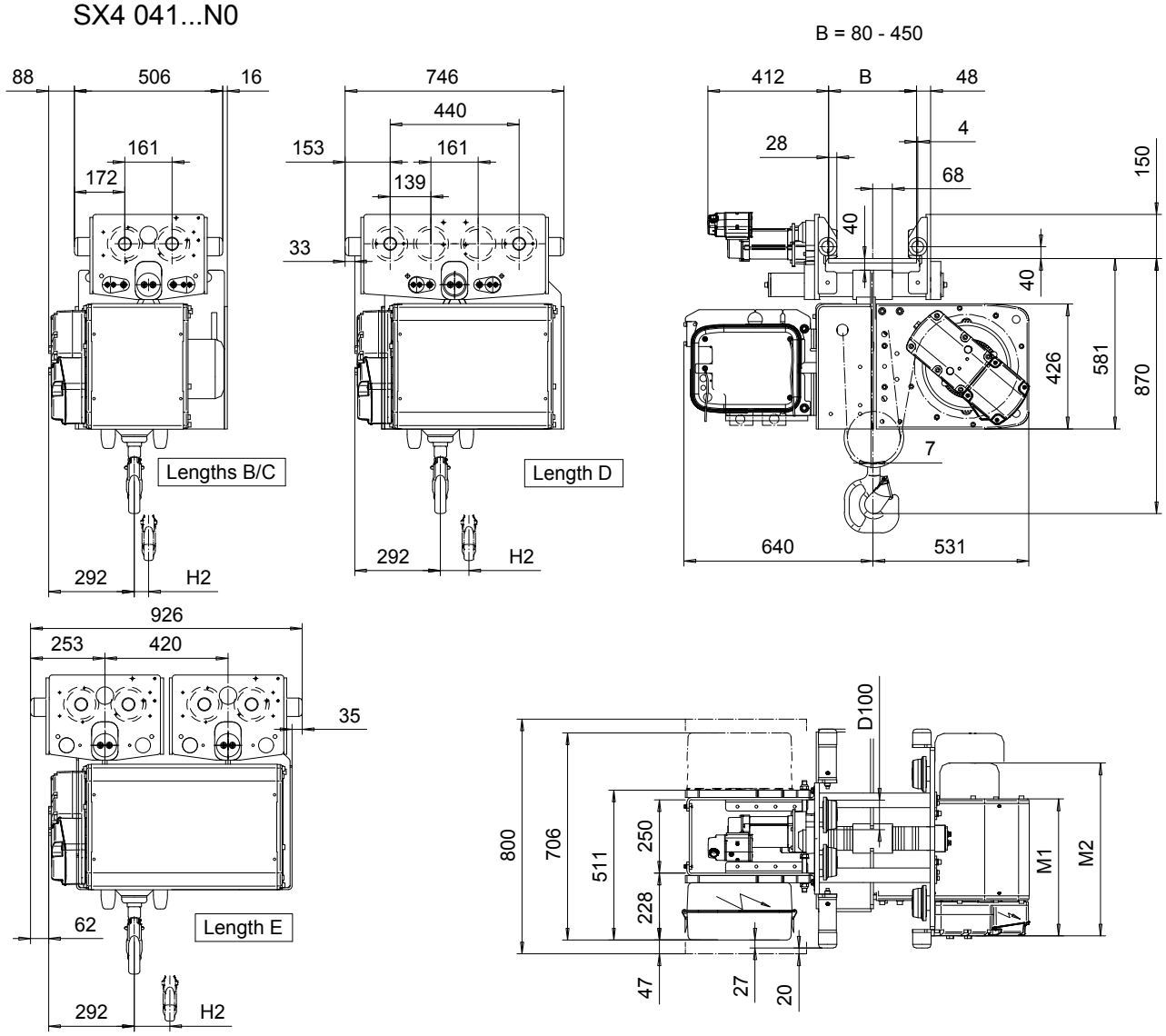

Motor Dimensions				
Motor	P3	P4	T3	T4
M2 (mm)	597	690	507	610
Weight (kg)	35	53	22	45

Load	Class	Hoisting speed (m/min)		
(kg)	Fem/ISO	Gear+Motor code:		
		E+P3	F+P3	H+P4
3000	3m/M6	4.8/0.8	6/1	9.5/1.6
4000	3m/M6	4.8/0.8	6/1	9.5/1.6
5000	2m/M5	4.8/0.8	6/1	9.5/1.6

Total weight = Hoist weight + Motor weight

Hoist Dimensions				
HOL	Length	M1	H2	Weight
(m)	code	(mm)	(mm)	(kg)
6	B	467	49	470
9	C	567	73	490
12	D	667	97	530
15	E	787	121	540
Note: Weight calculated, when B = 300mm				

ETTPAL Design	ETTPAL Chd	Appd	Ref Drawing	QB-N-04
2002-08-28 Date	TROLLEY; NORMAL HEADROOM			1:10
SLEQDOCV Owner Dept	4 ROPE FALLS			Folder
R&M MATERIALS HANDLING INC.	R&M MATERIALS HANDLING, INC. HOIST & CRANE PRODUCTS SPRINGFIELD, OHIO	D002097-A		Issue 6

This document is the absolute property of R&M Materials Handling, Inc. This document must not be copied without the written permission of R&M Materials Handling, Inc.
The contents thereof must not be disclosed to a third party nor be used for any unauthorized purpose. Contravention will be prosecuted.